Labrador Papercraft

Height 70 cm // Width 64 cm // Depth 45 cm // Made for A4

Creator: Madbydd

STEP 1 // CUT

Cut out the parts along the solid lines. If there is an inner part, cut that out then move to the exterior.

(I find a good way to cut is to hold a ruler to the straight edges and follow the ruler with an Exacto knife.)

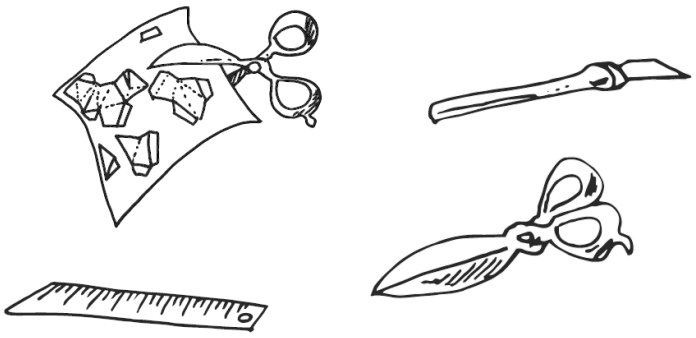

STEP 2 // FOLD

Fold the tabs according to the dots. There are two different types of folds, mountain folds (up) and valley folds (down). Their names describe their outward or inward orientation.

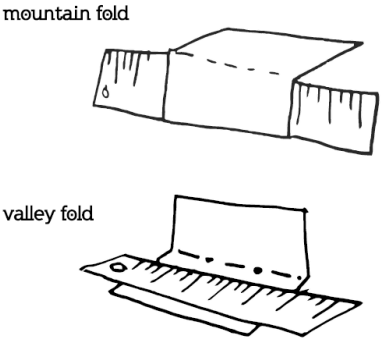

STEP 3 // GLUE

You will now need to glue all the pieces together. To do this, you can use Loctite super glue because it's precise and quick drying, but I prefer to use small pieces of double-sided bonding tape your final product will be perfection!

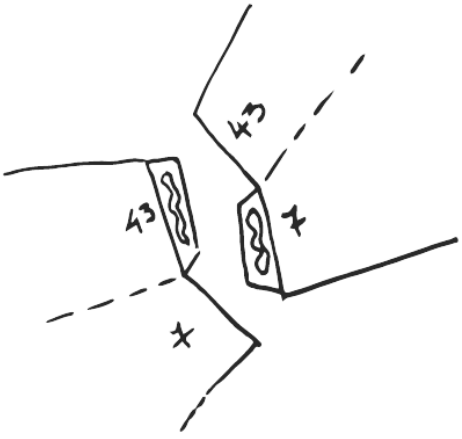

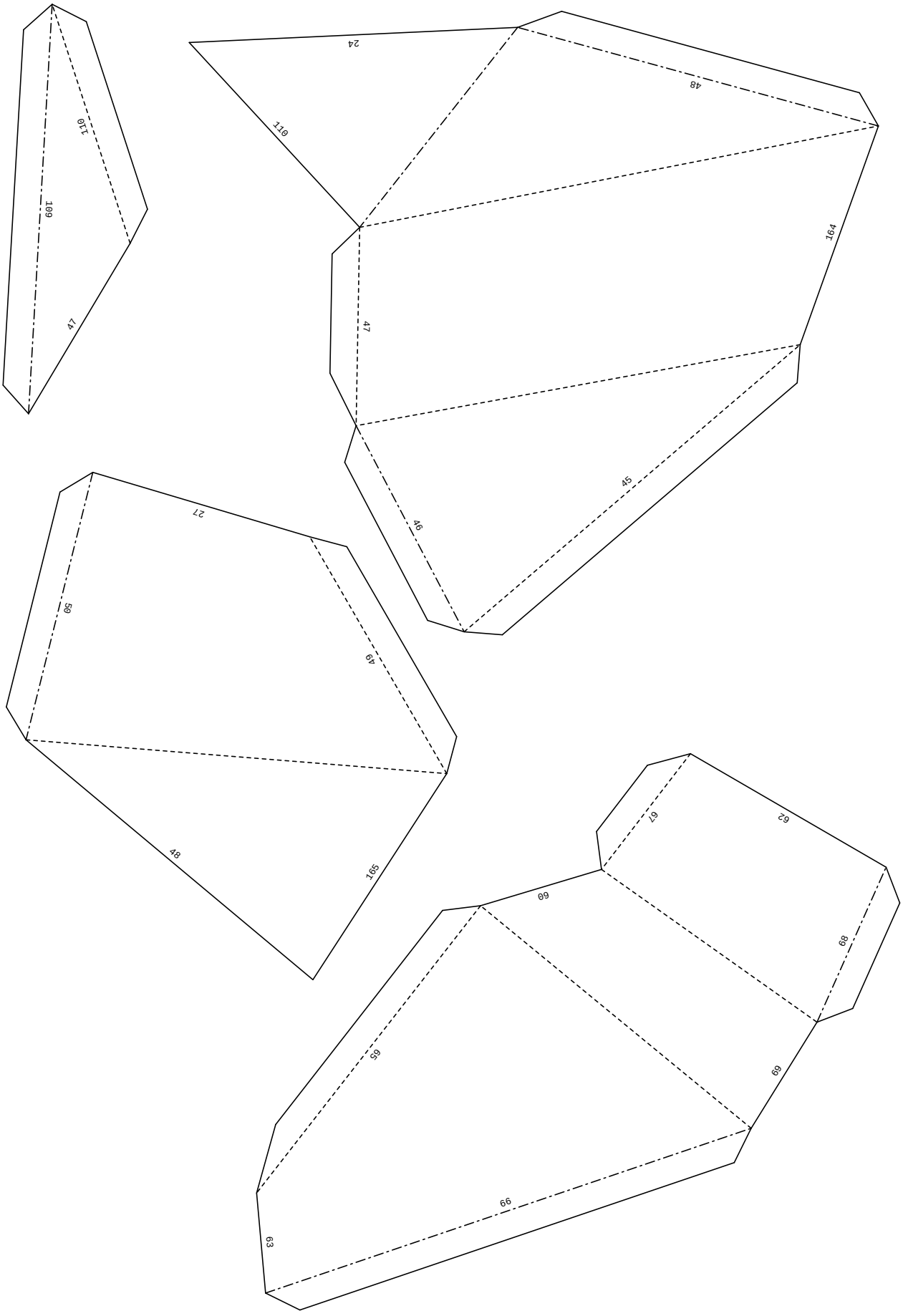
24
48
110
110
109
164
47
47
45
46
27
50
49
48
165
67
62
60
68
65
69
66
63

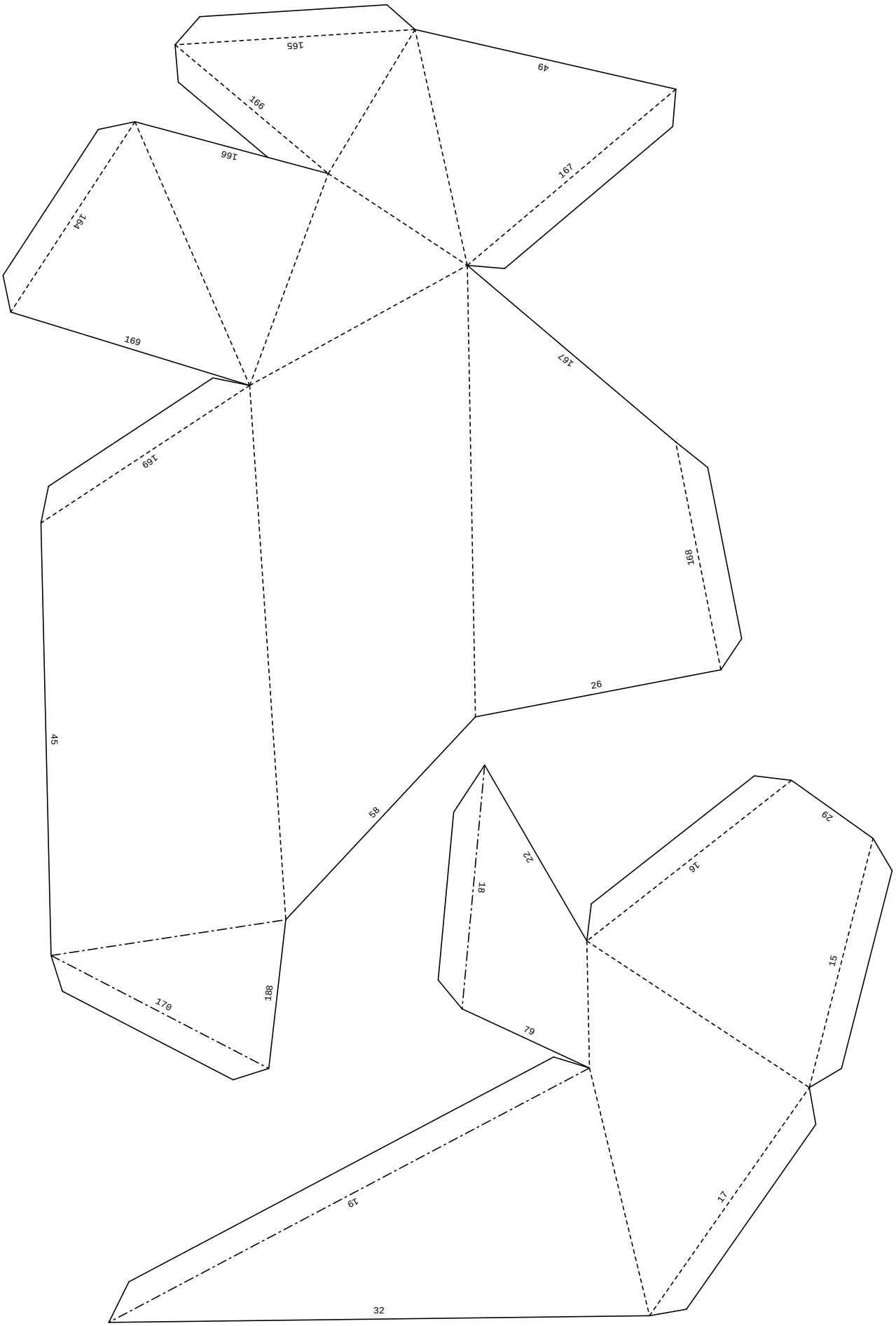
165
49
166
166
167
164
169
167
169
168
26
45
58
22
18
29
16
15
79
188
170
19
17
32

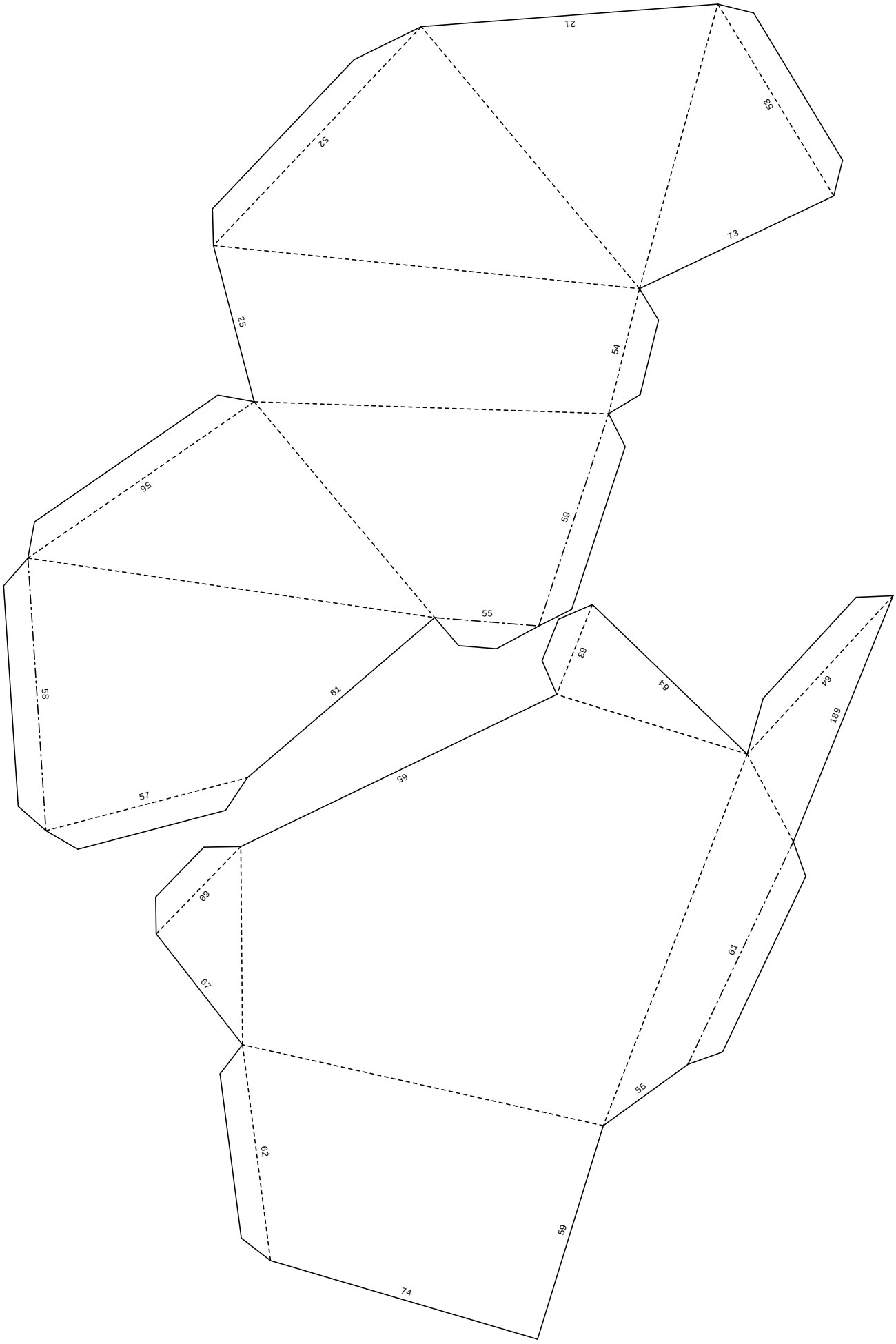

3/48 (row1 col3)

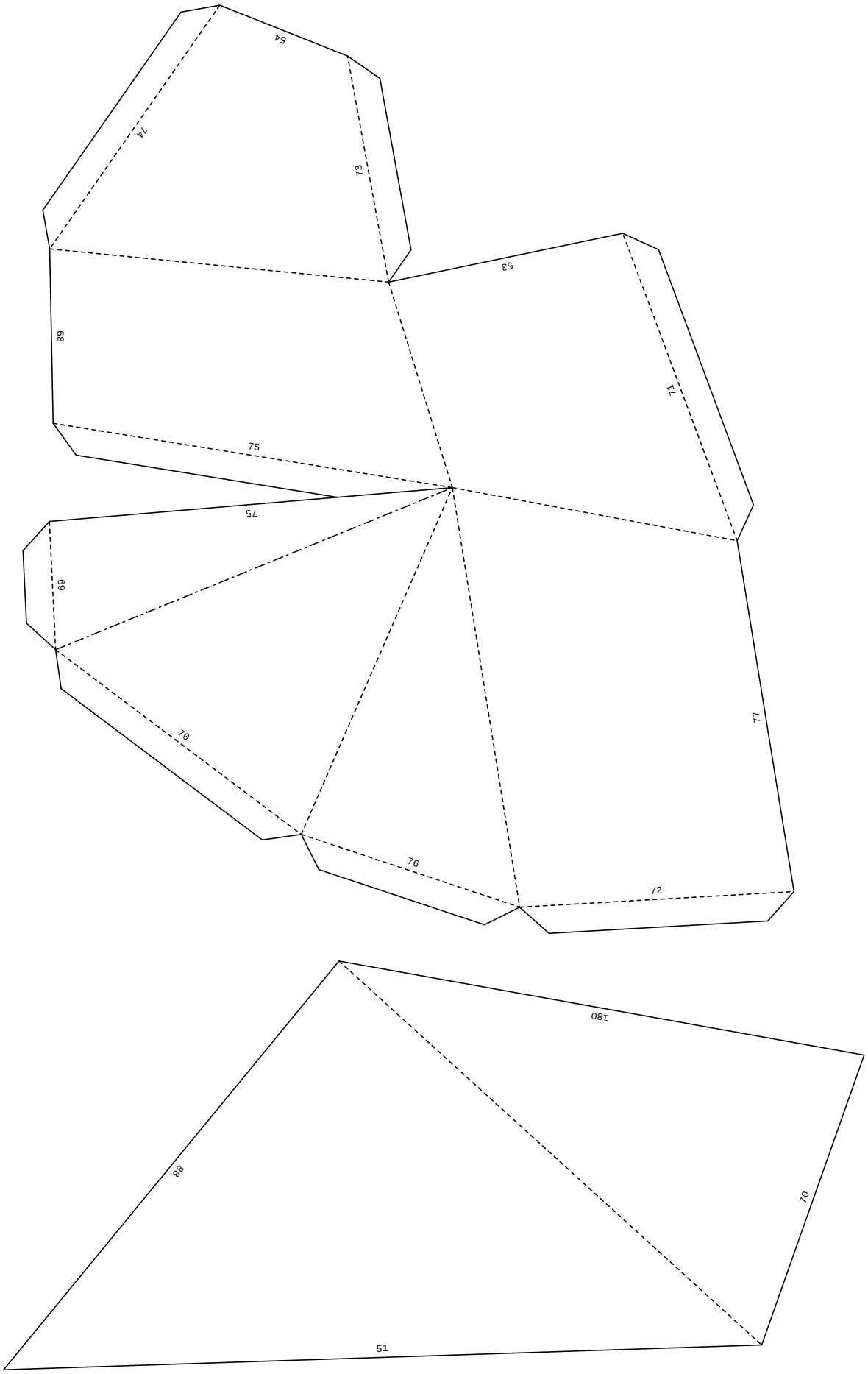
54
74
73
53
68
71
75
75
69
70
77
76
72
180
88
70
51

5/48 (row1 col5)

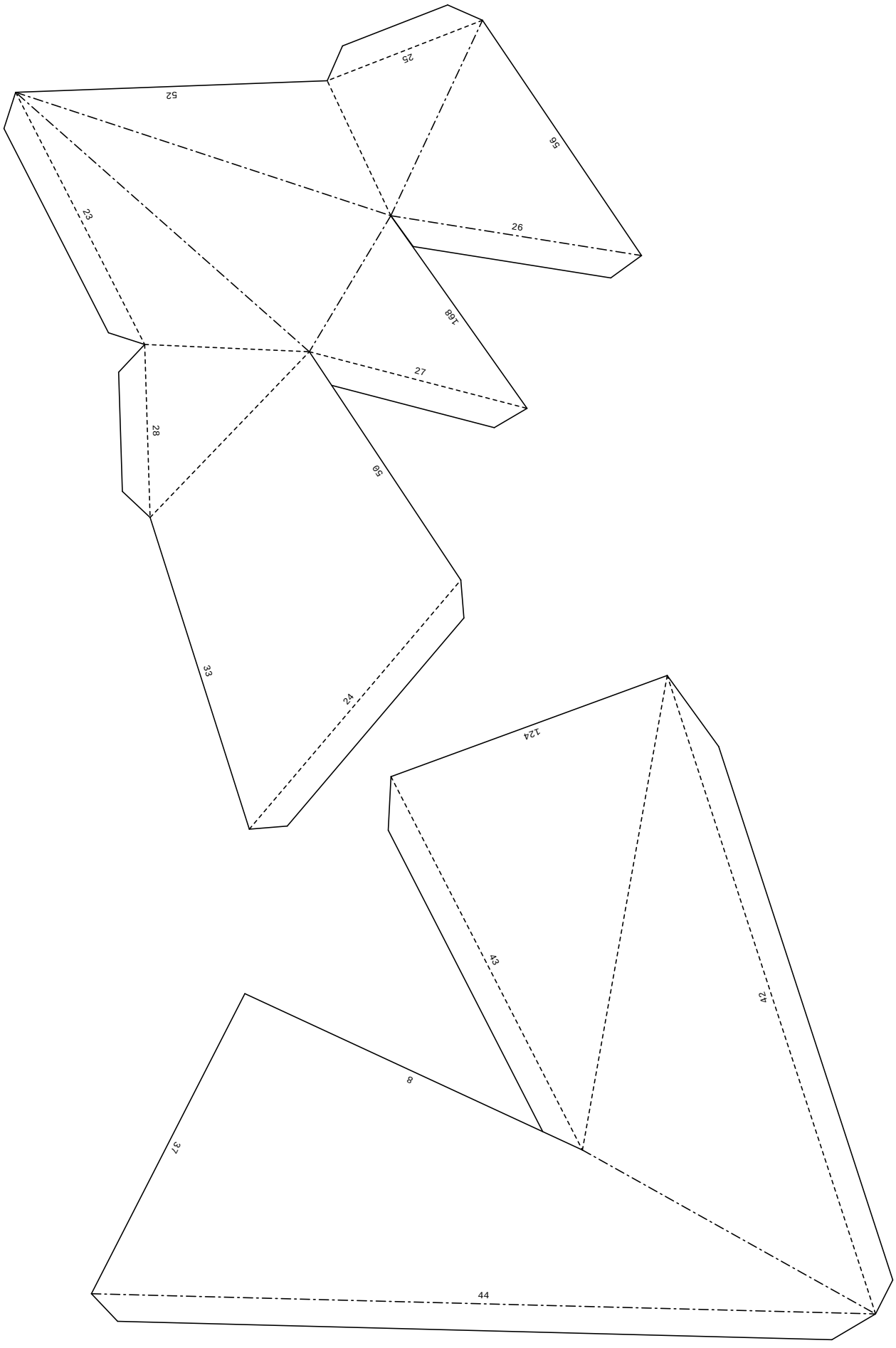
52
25
56
23
26
168
27
28
50
33
24
124
43
42
8
37
44

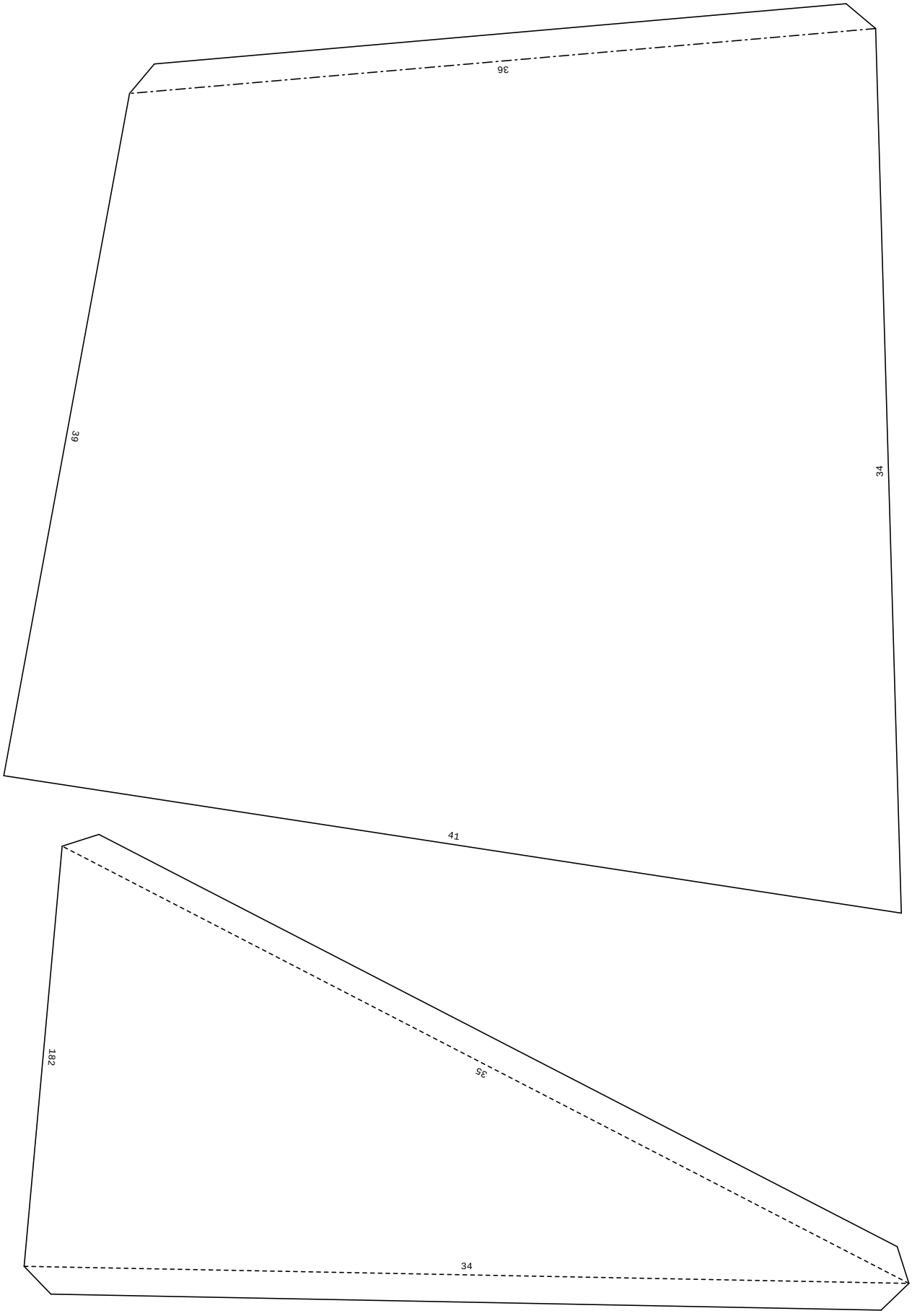
36
39
34
41
182
35
34

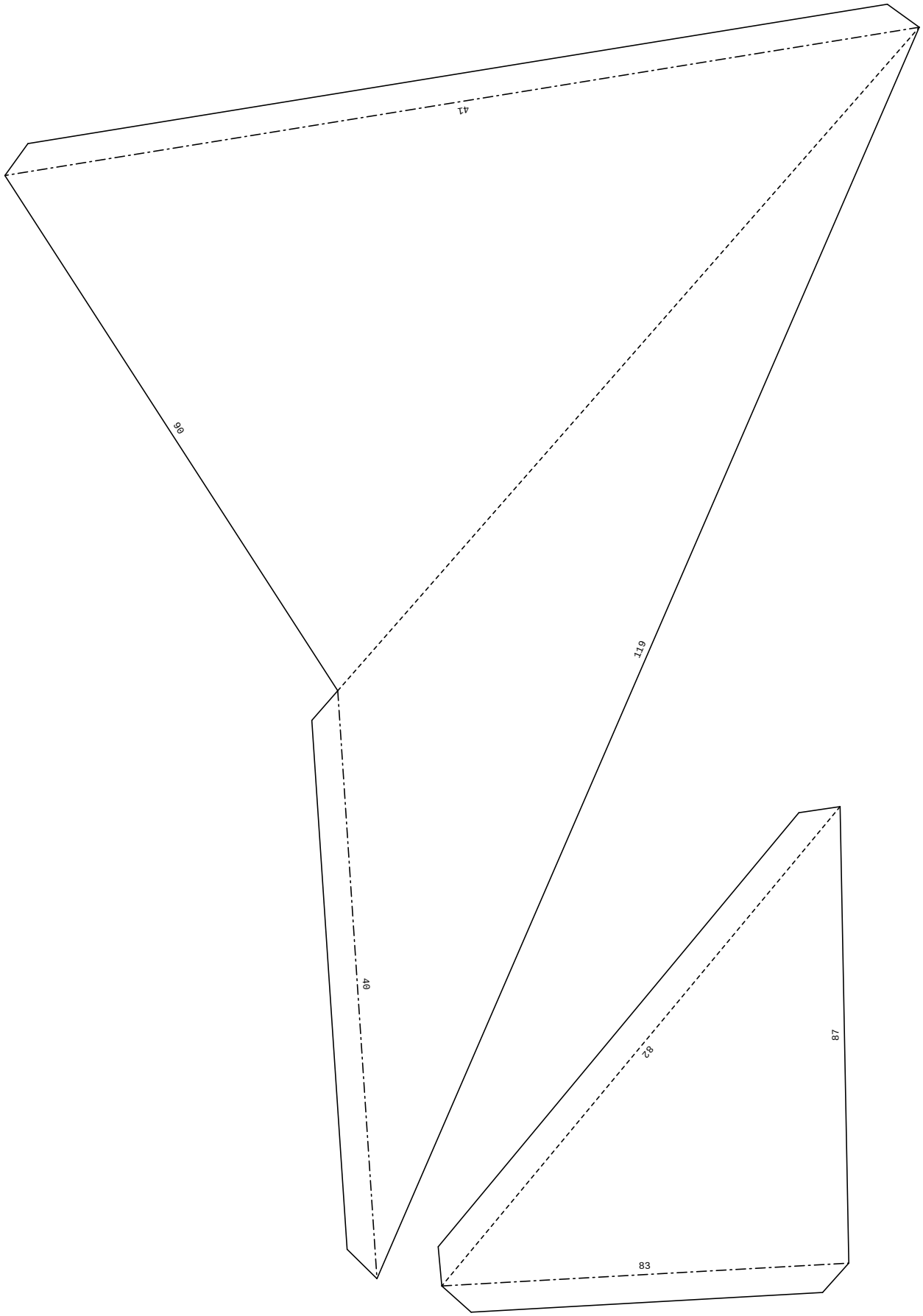
47
90
119
40
87
82
83

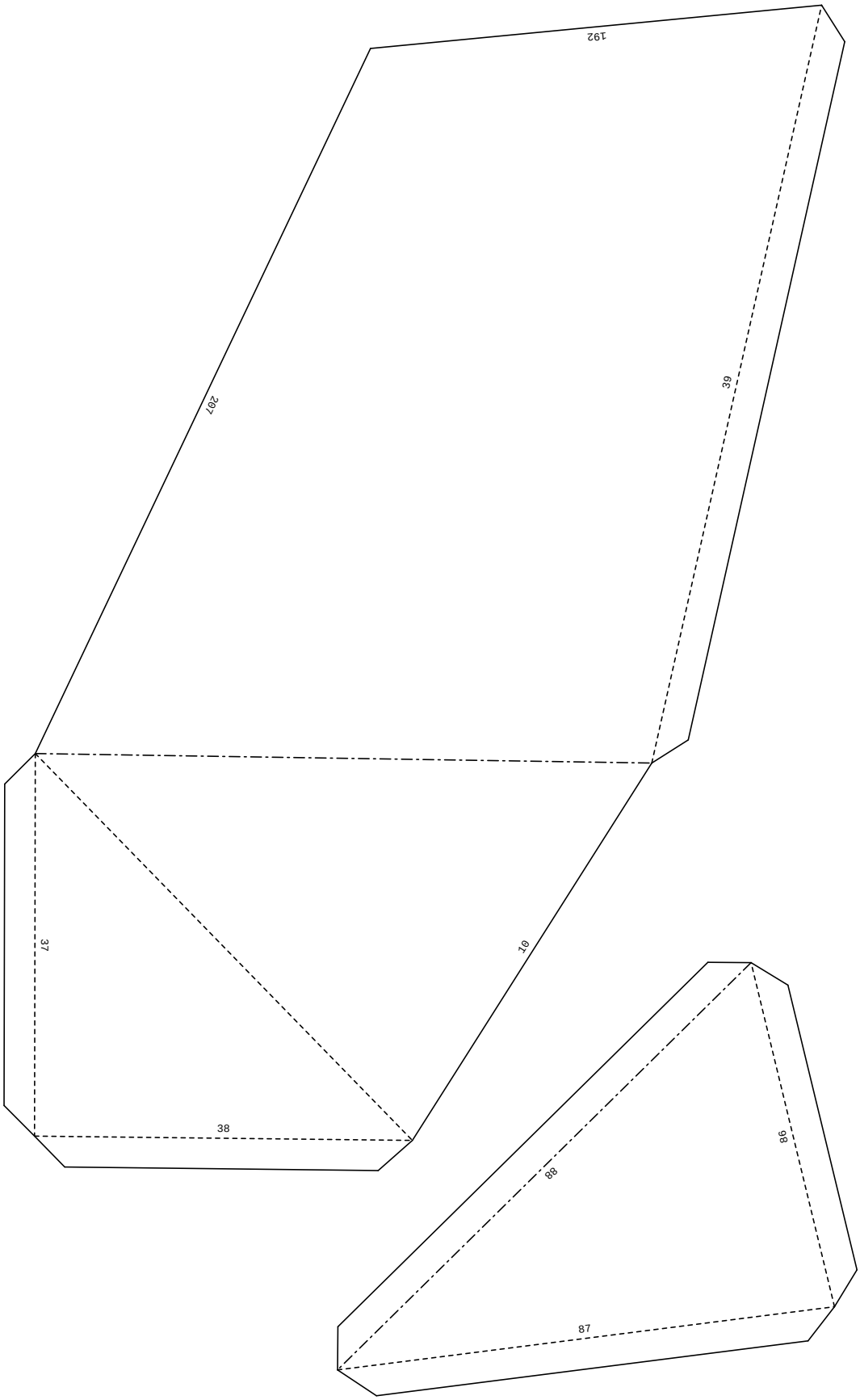
192
207
39
37
10
38
98
88
87

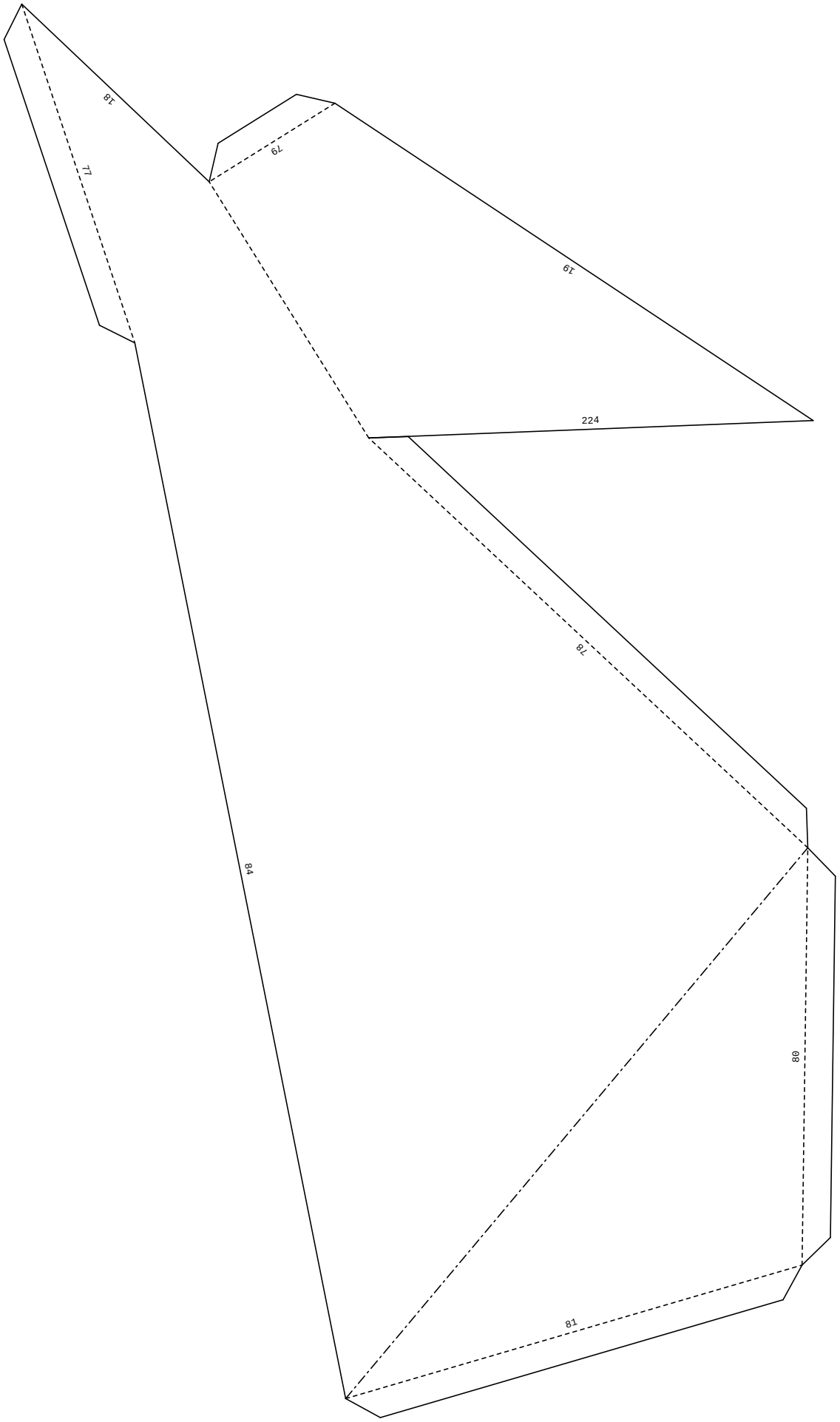

10/48 (row2 col1)

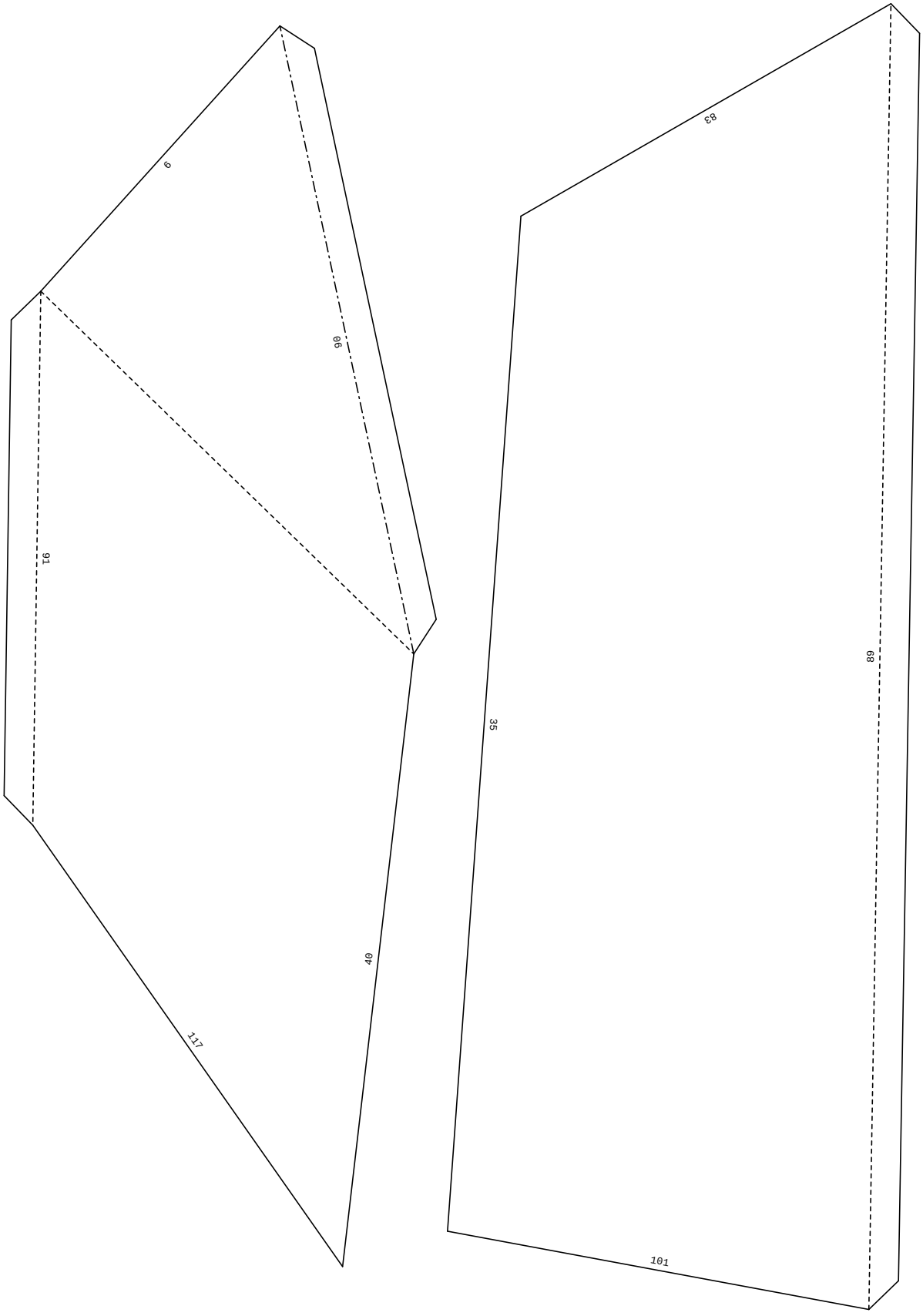
9
60
91
117
40
83
68
35
101

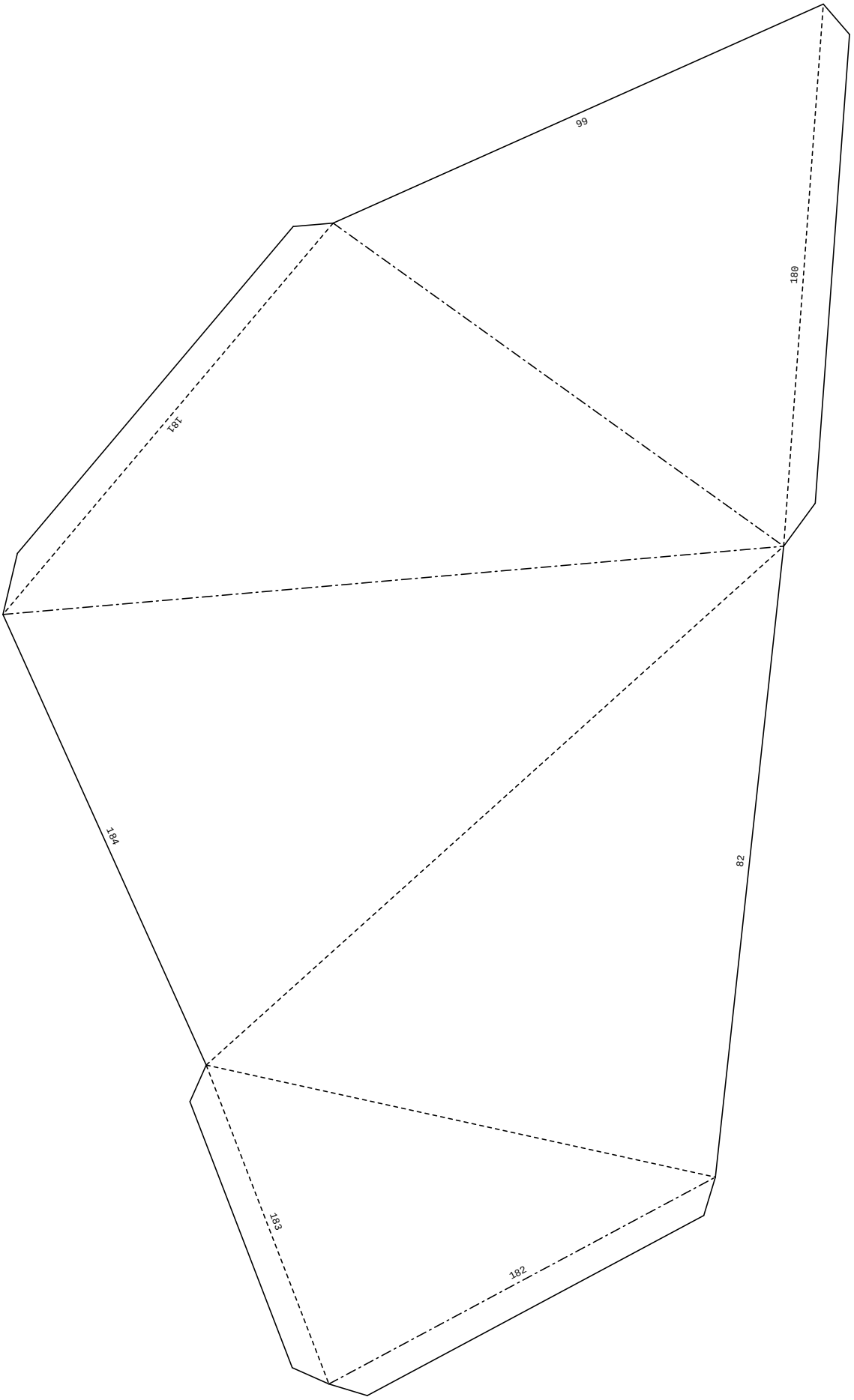

12/48 (row2 col3)

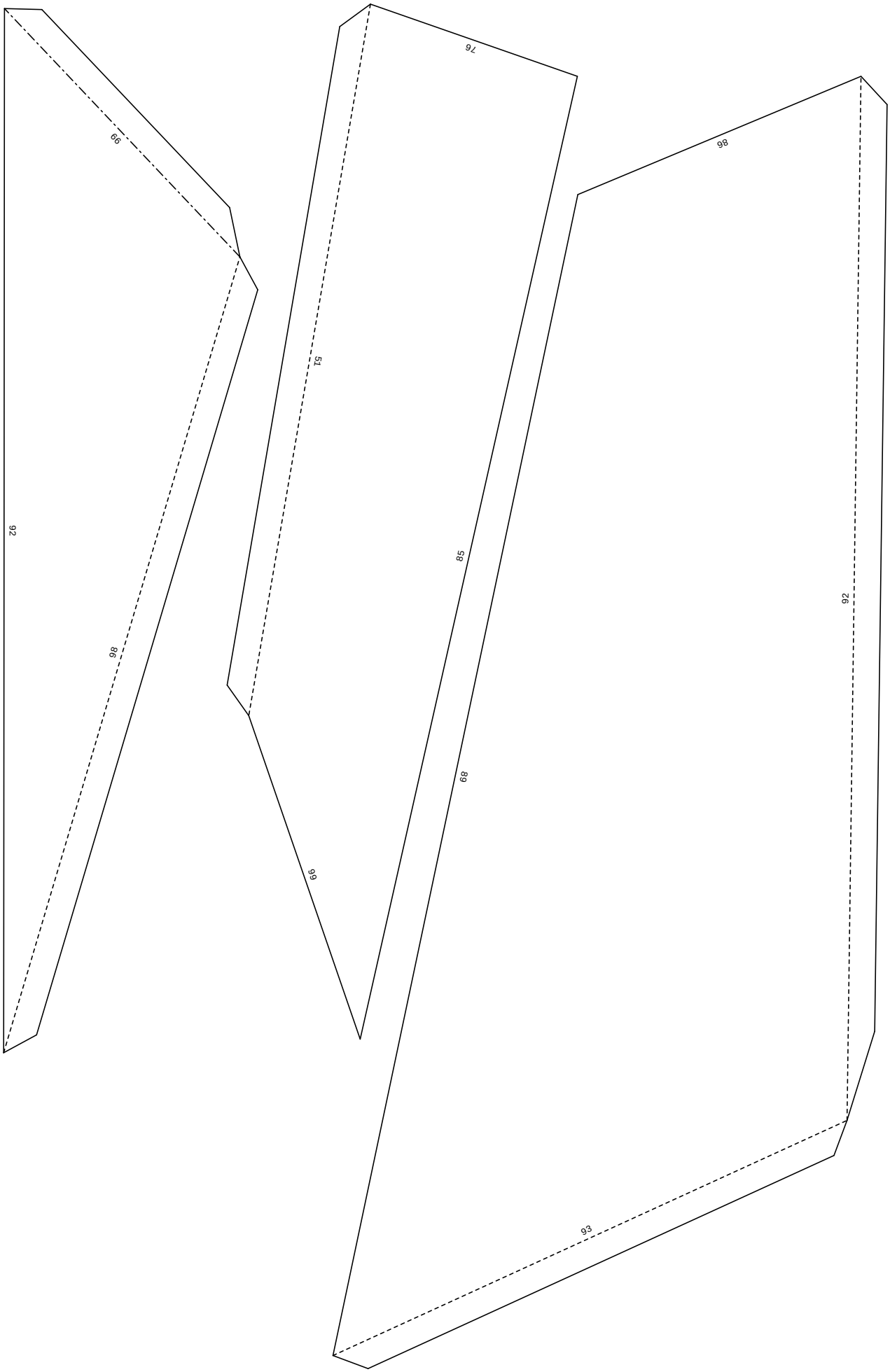

13/48 (row2 col4)

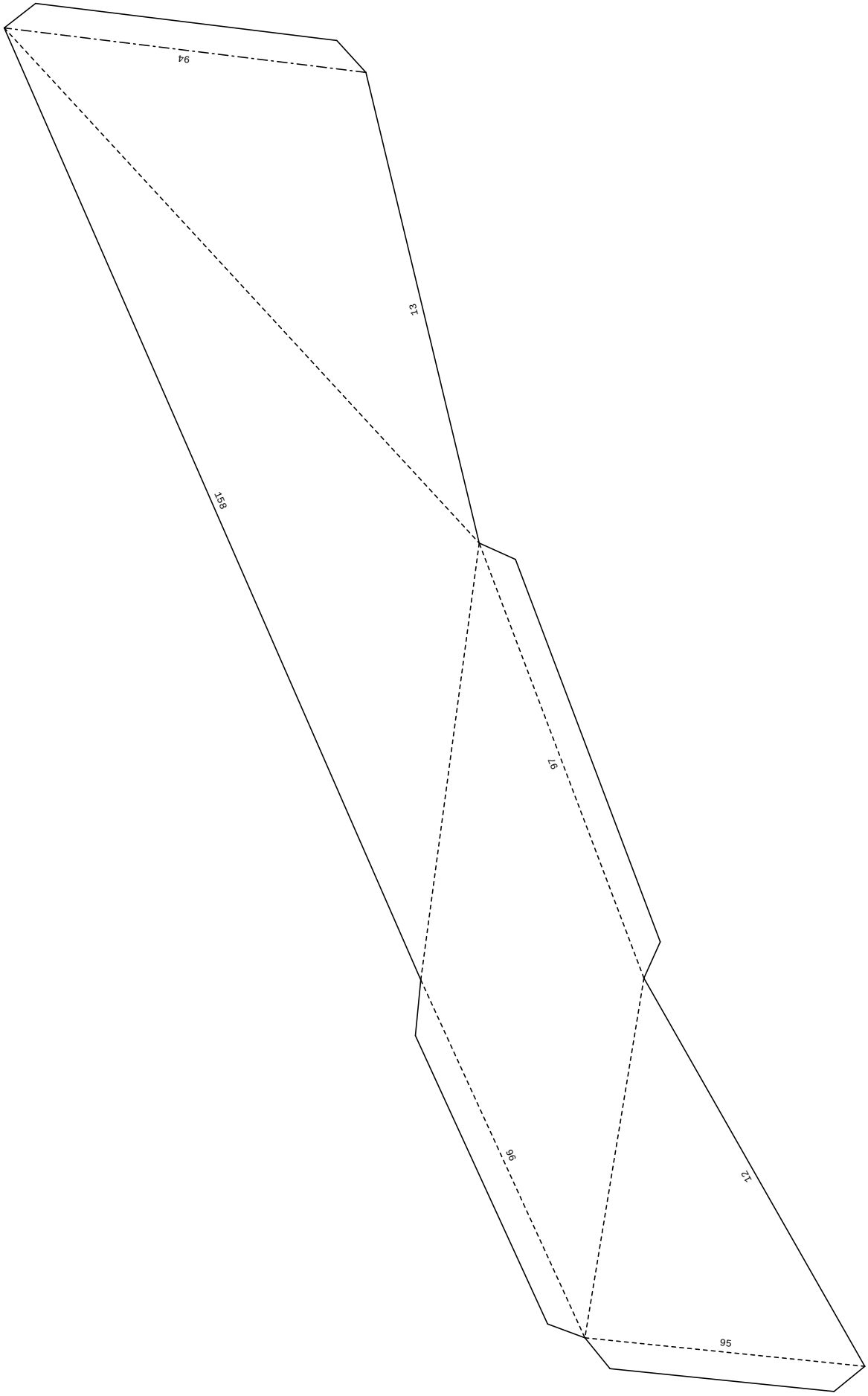
94
13
158
97
96
12
95

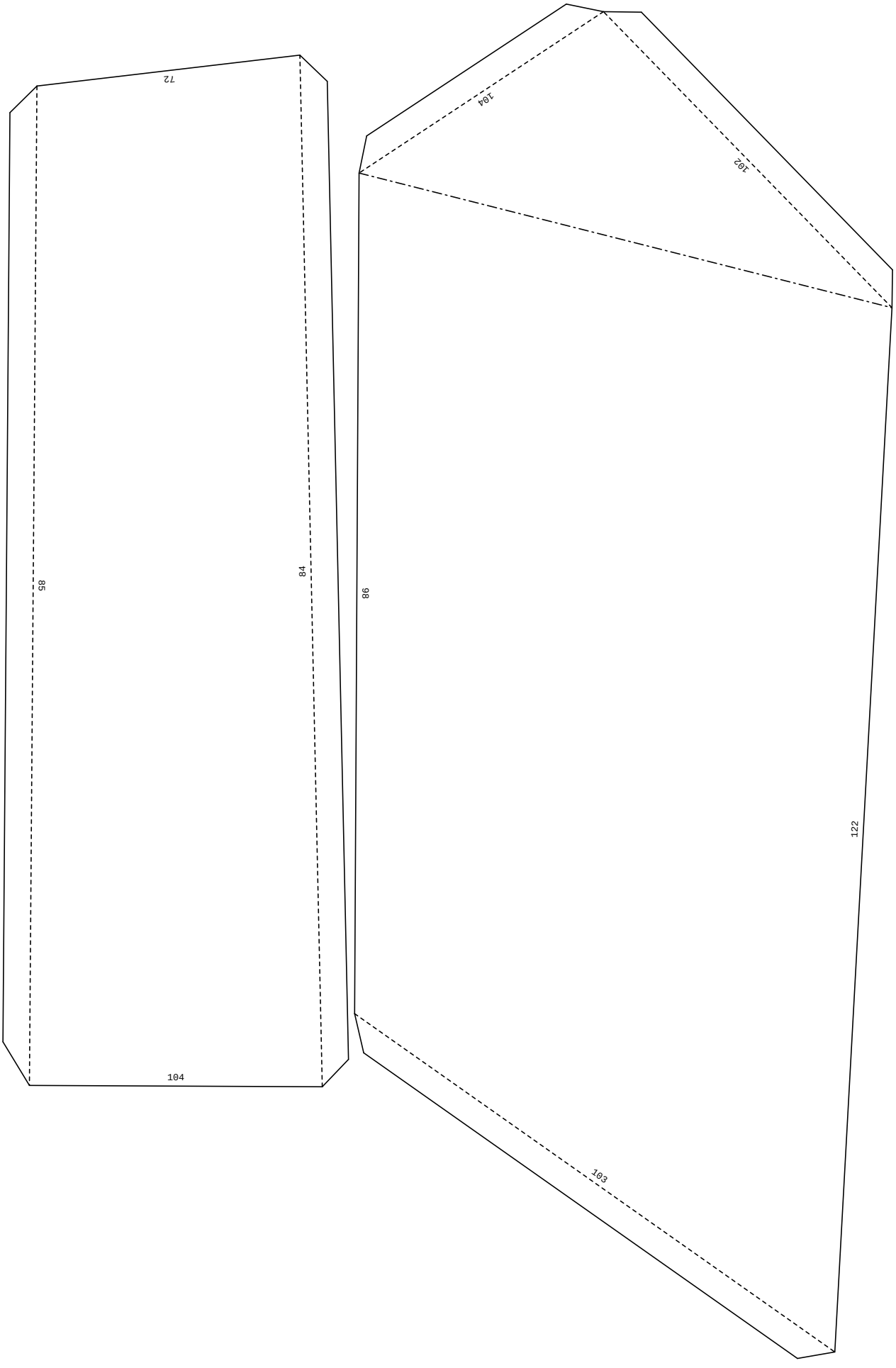
72
85
84
104
104
102
86
122
103

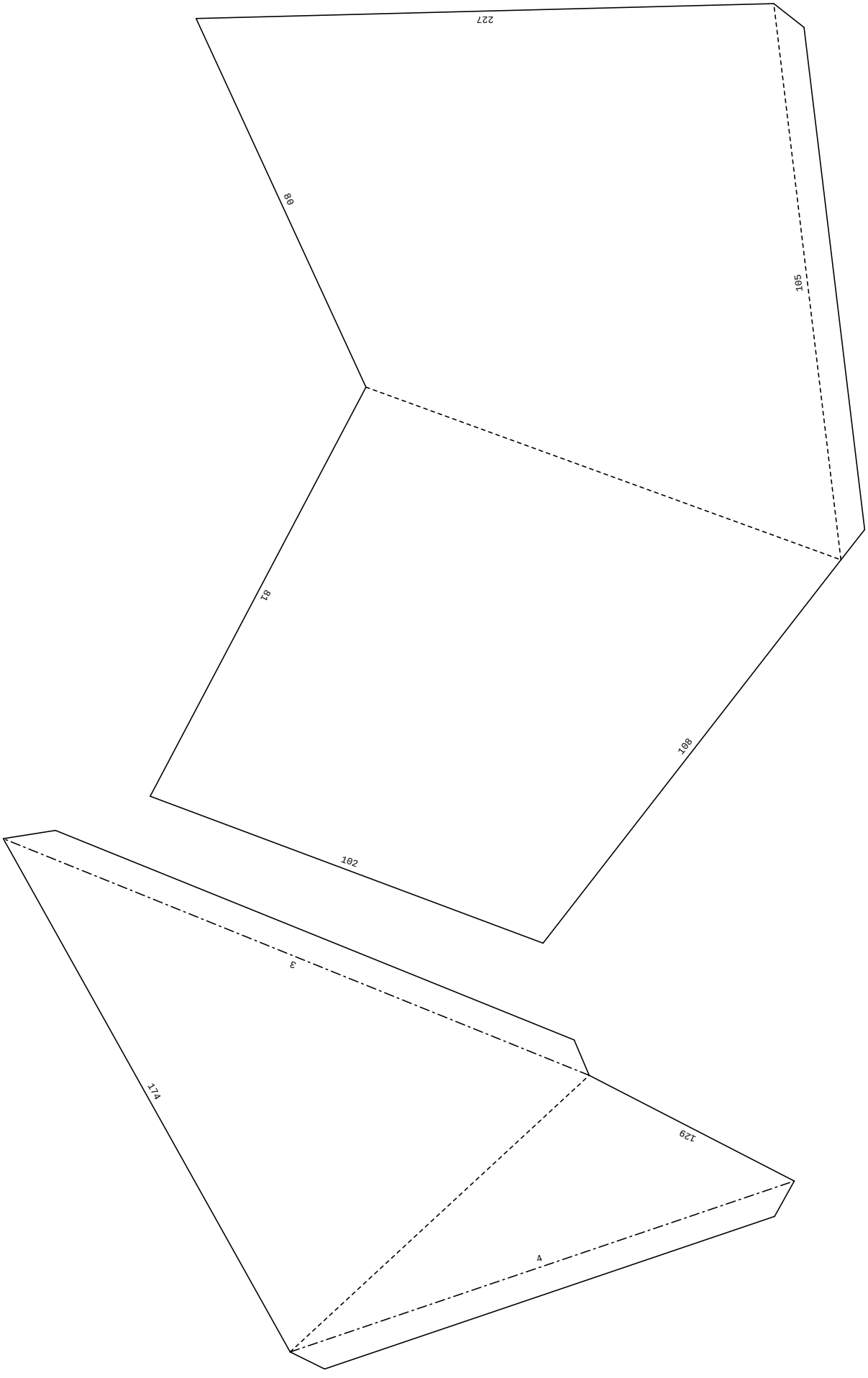

16/48 (row2 col7)

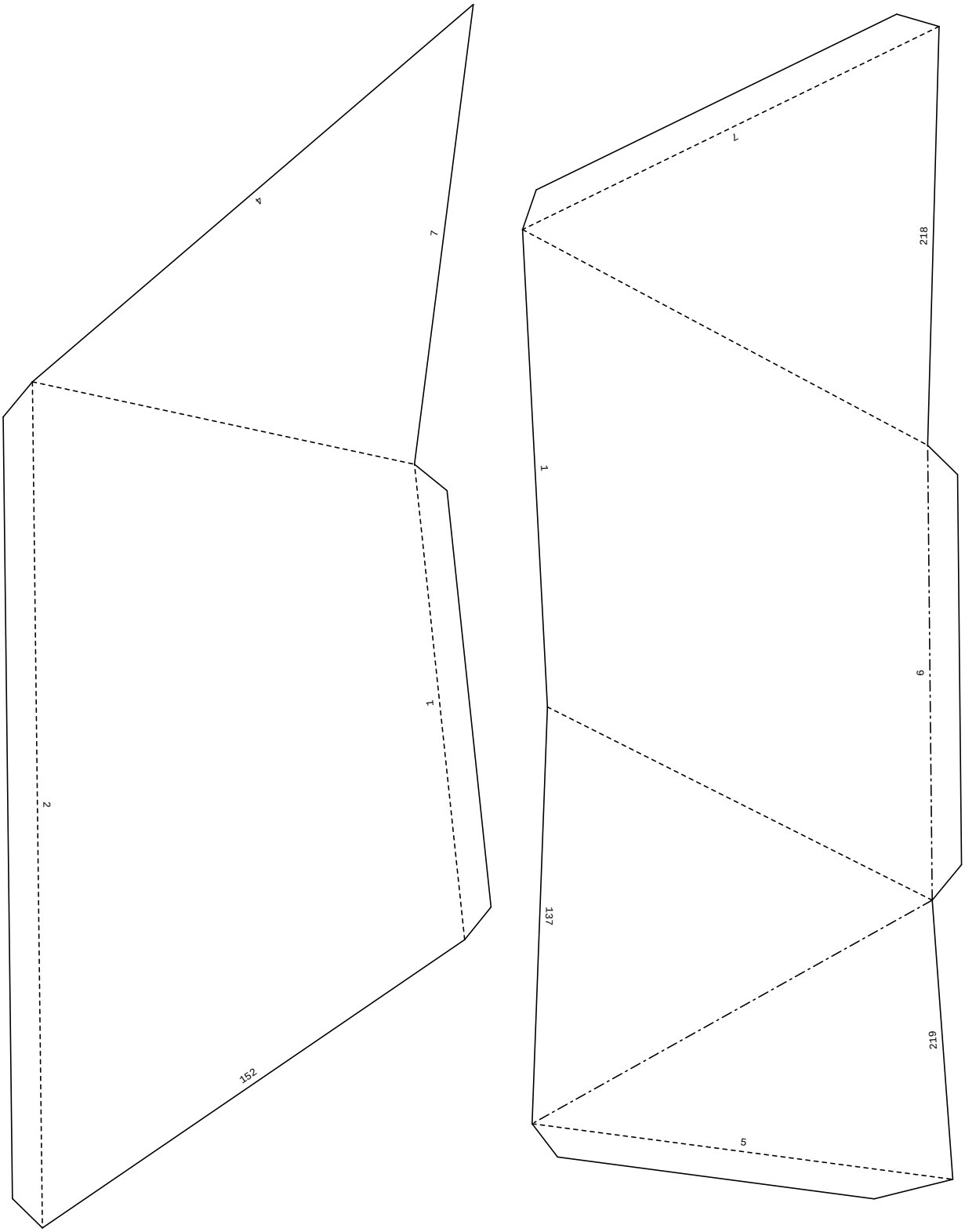
4
7
1
2
152
7
218
1
6
137
219
5

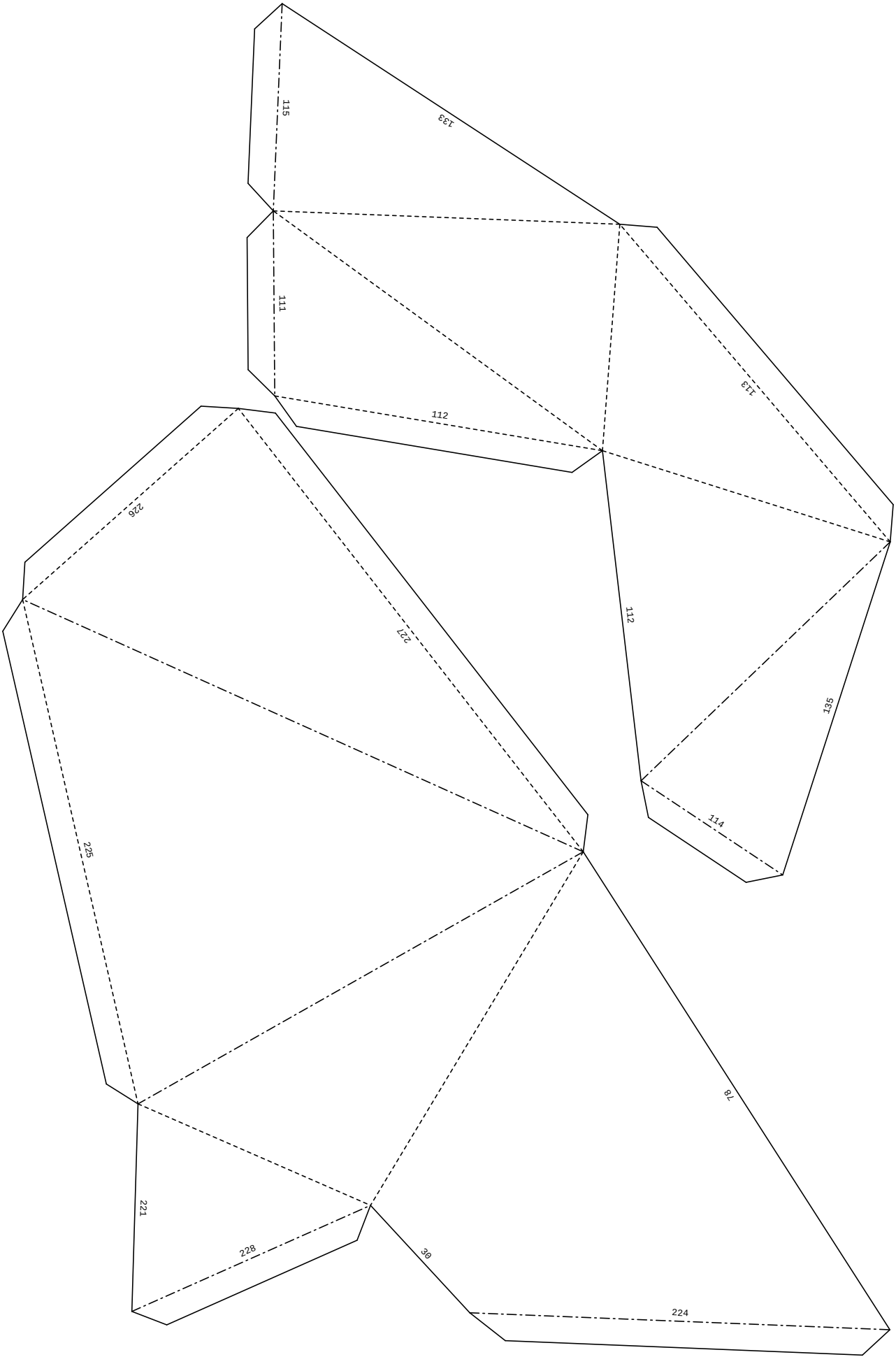
115
133
111
112
113
226
227
112
135
114
225
78
221
228
30
224

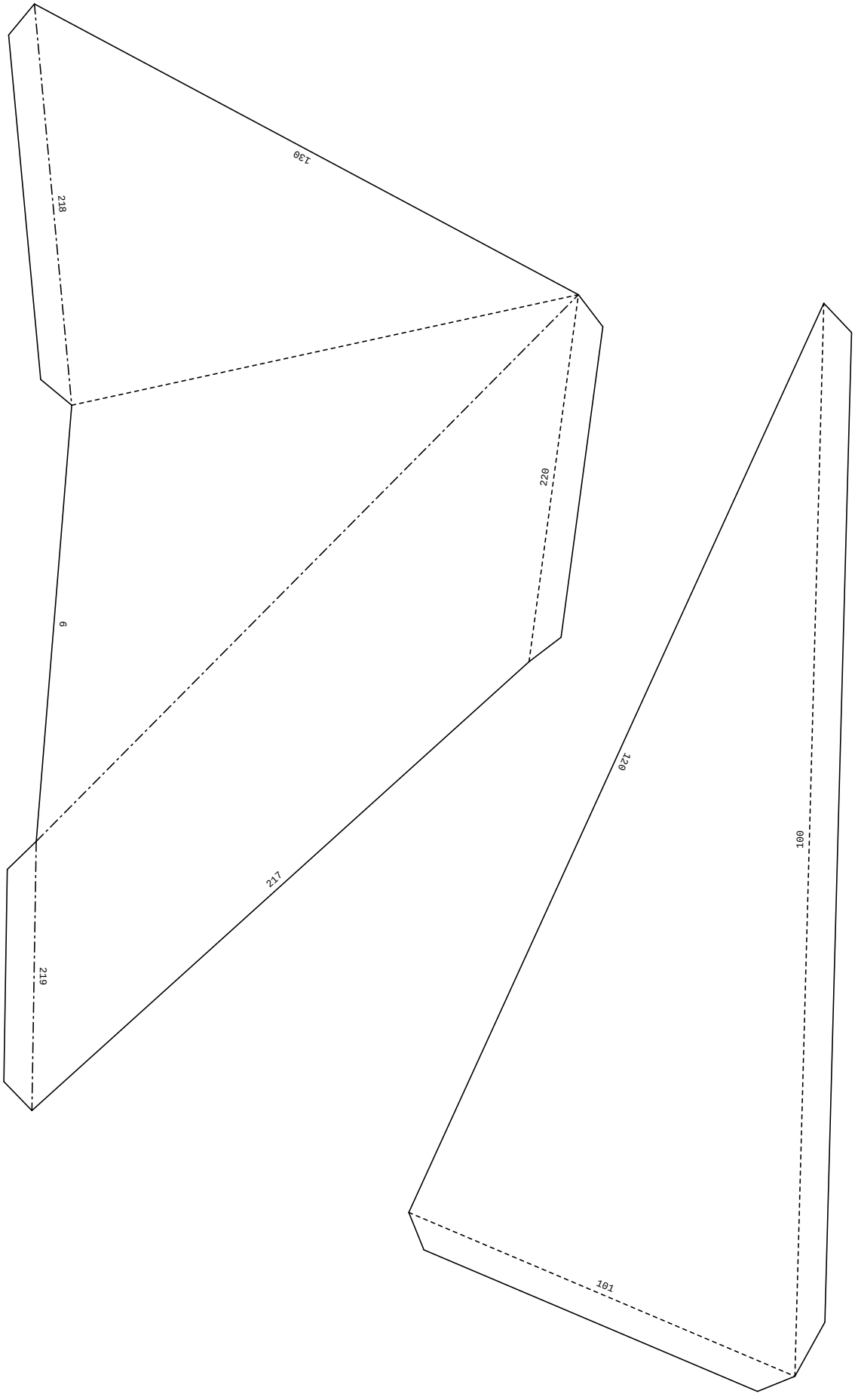
130
218
220
6
217
219
120
100
101

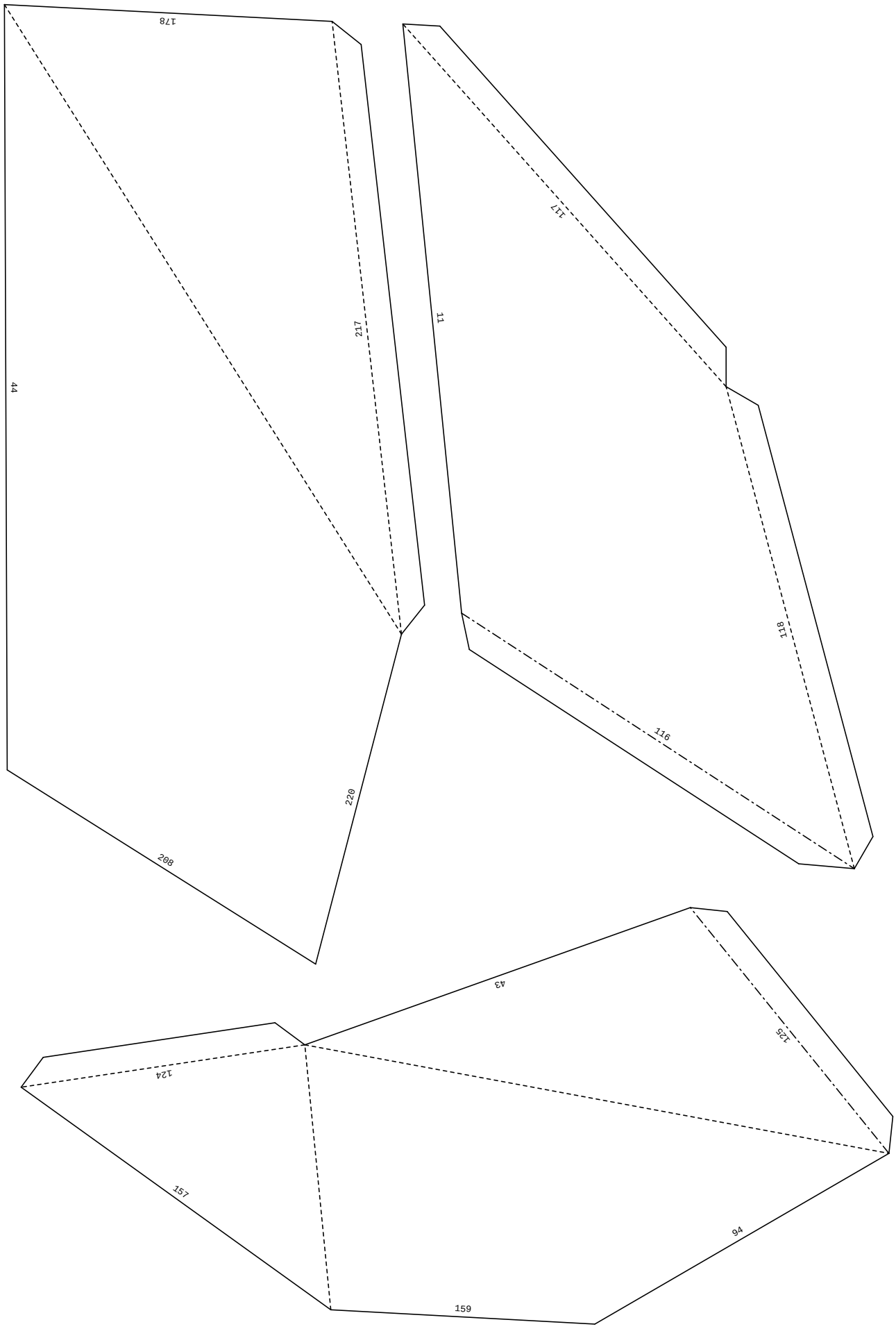
178
217
44
208
220
117
11
118
116
43
125
124
157
94
159

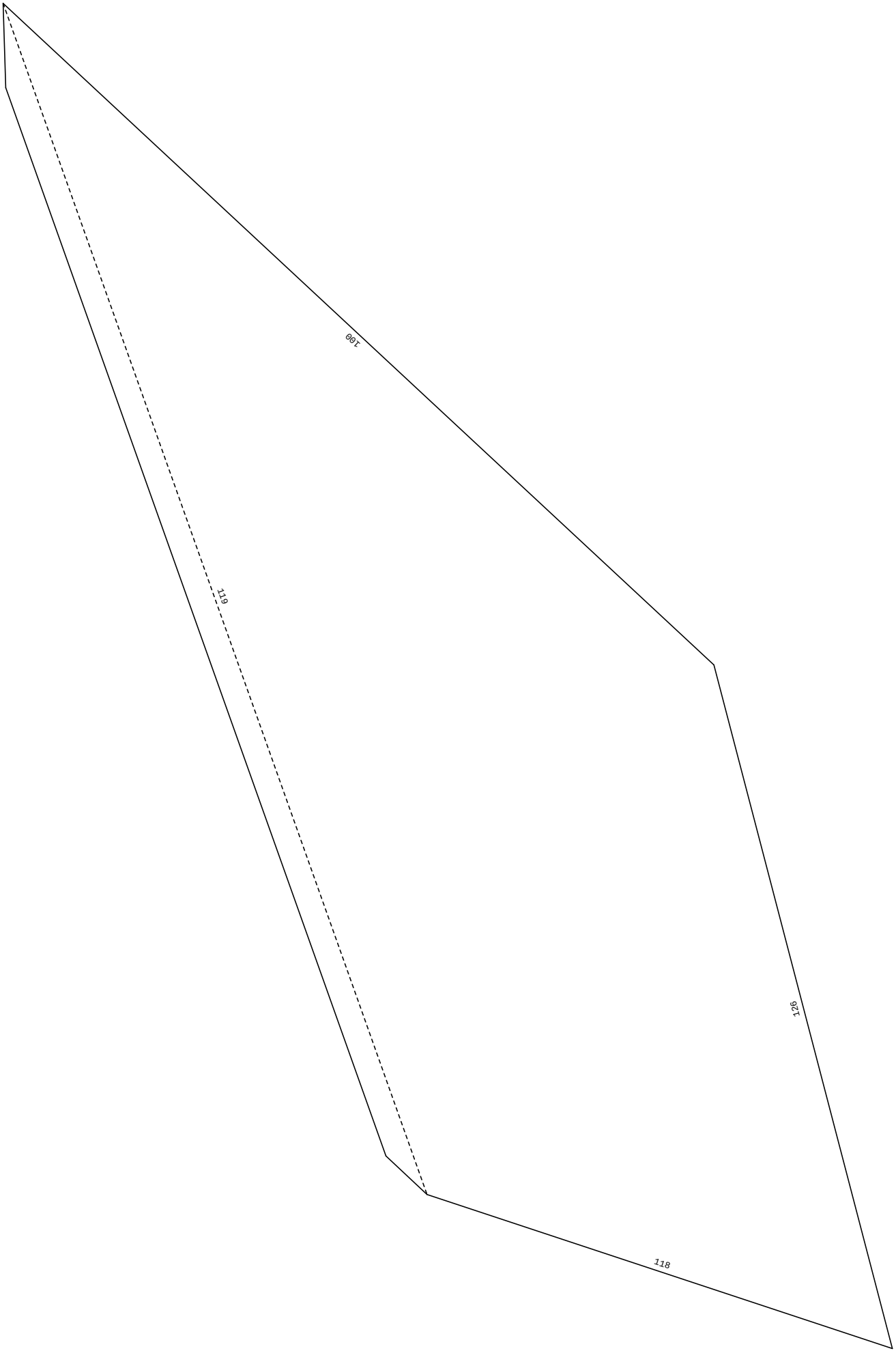

21/48 (row3 col3)

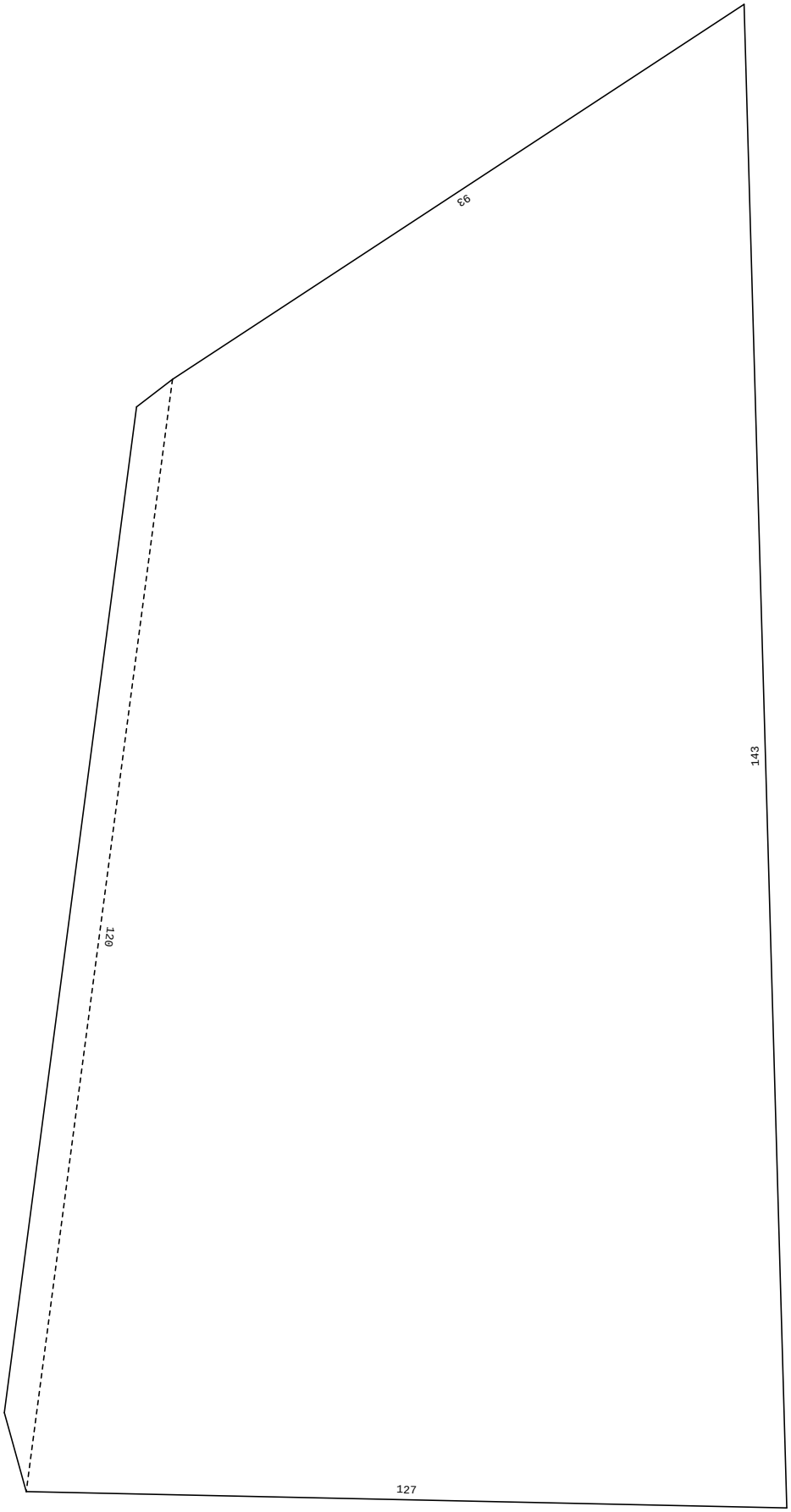

22/48 (row3 col4)

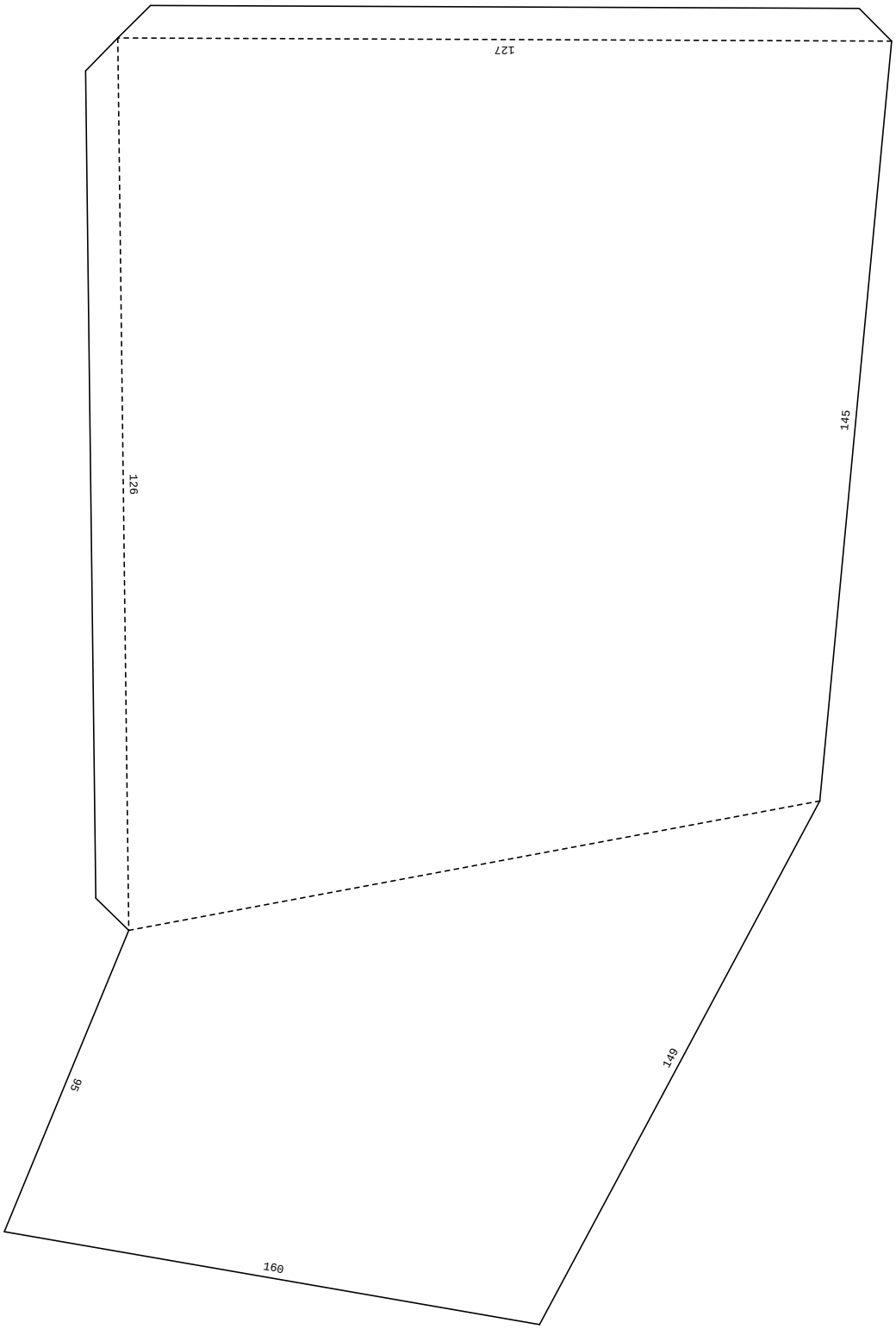
127
126
145
95
149
160

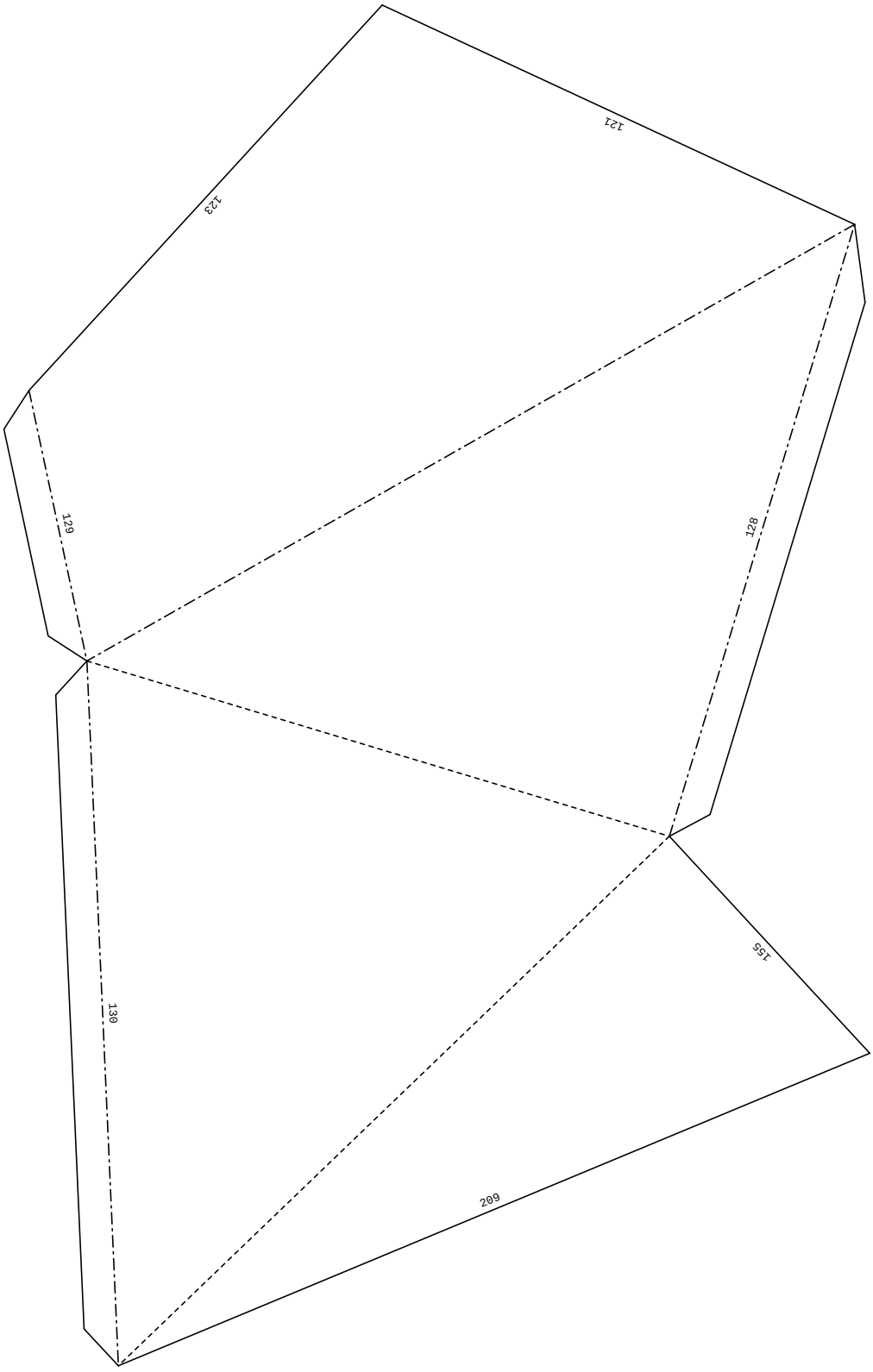
121
123
129
128
130
155
209

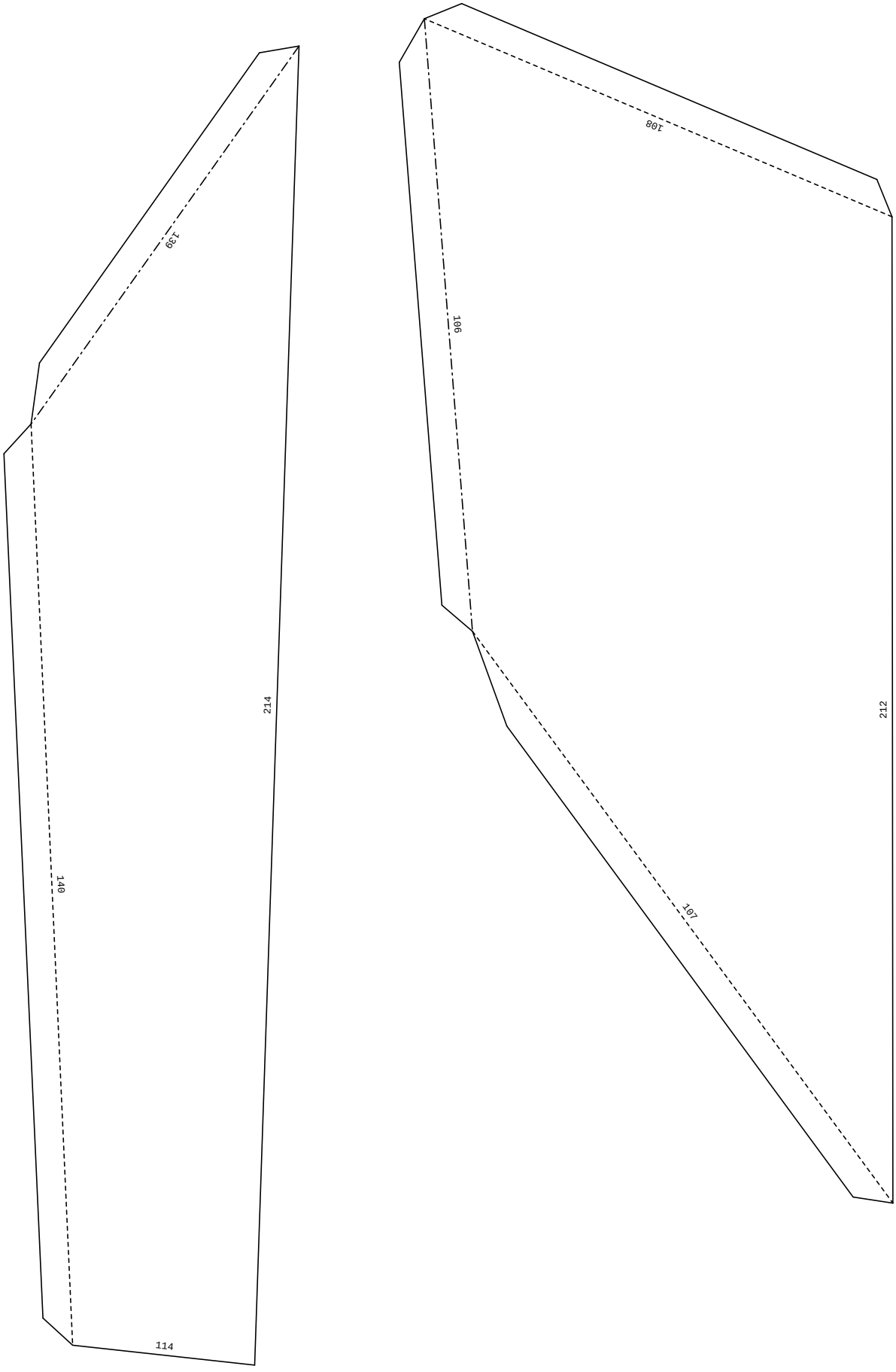
139
214
140
114
108
106
212
107

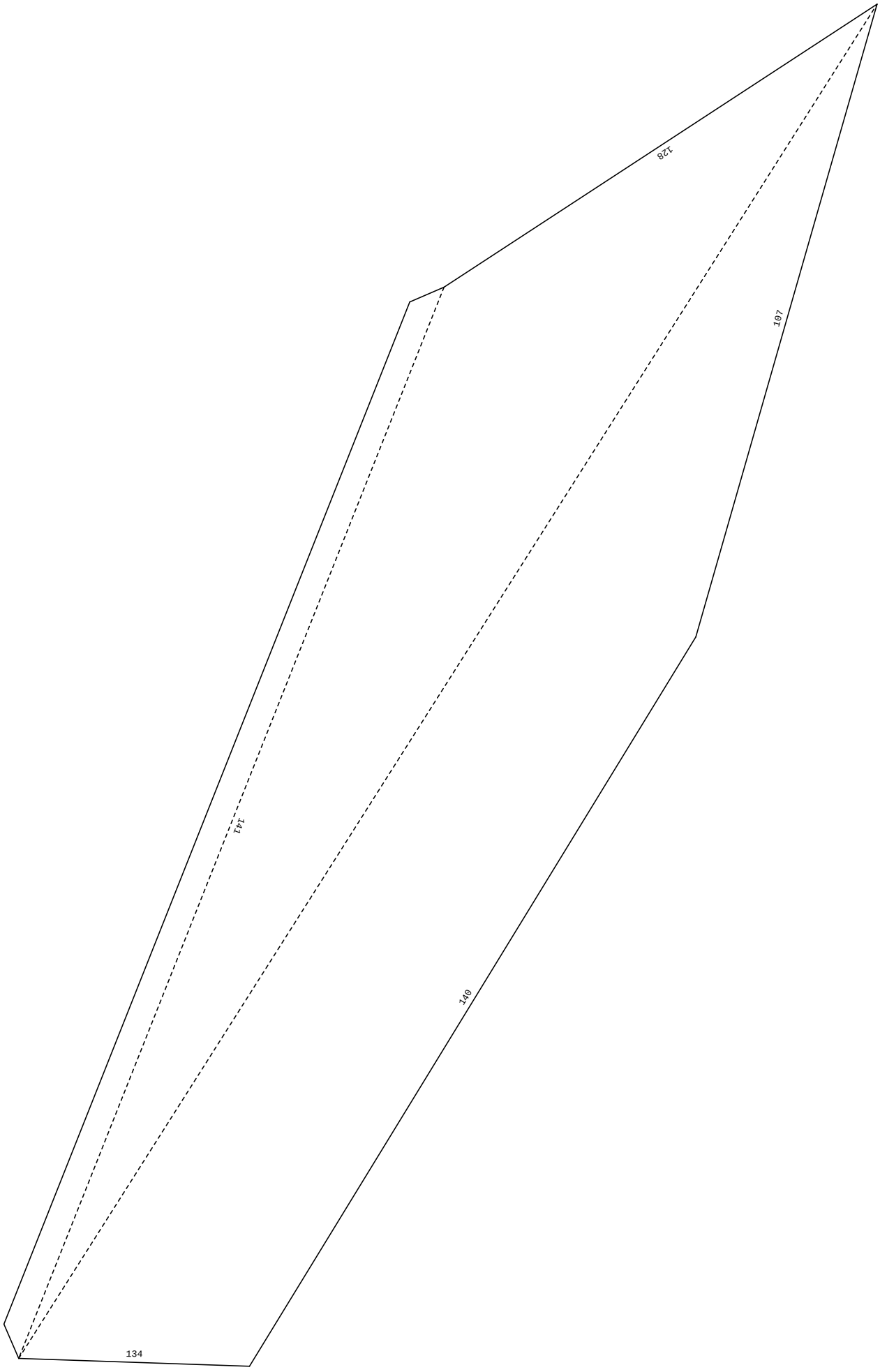

26/48 (row3 col8)

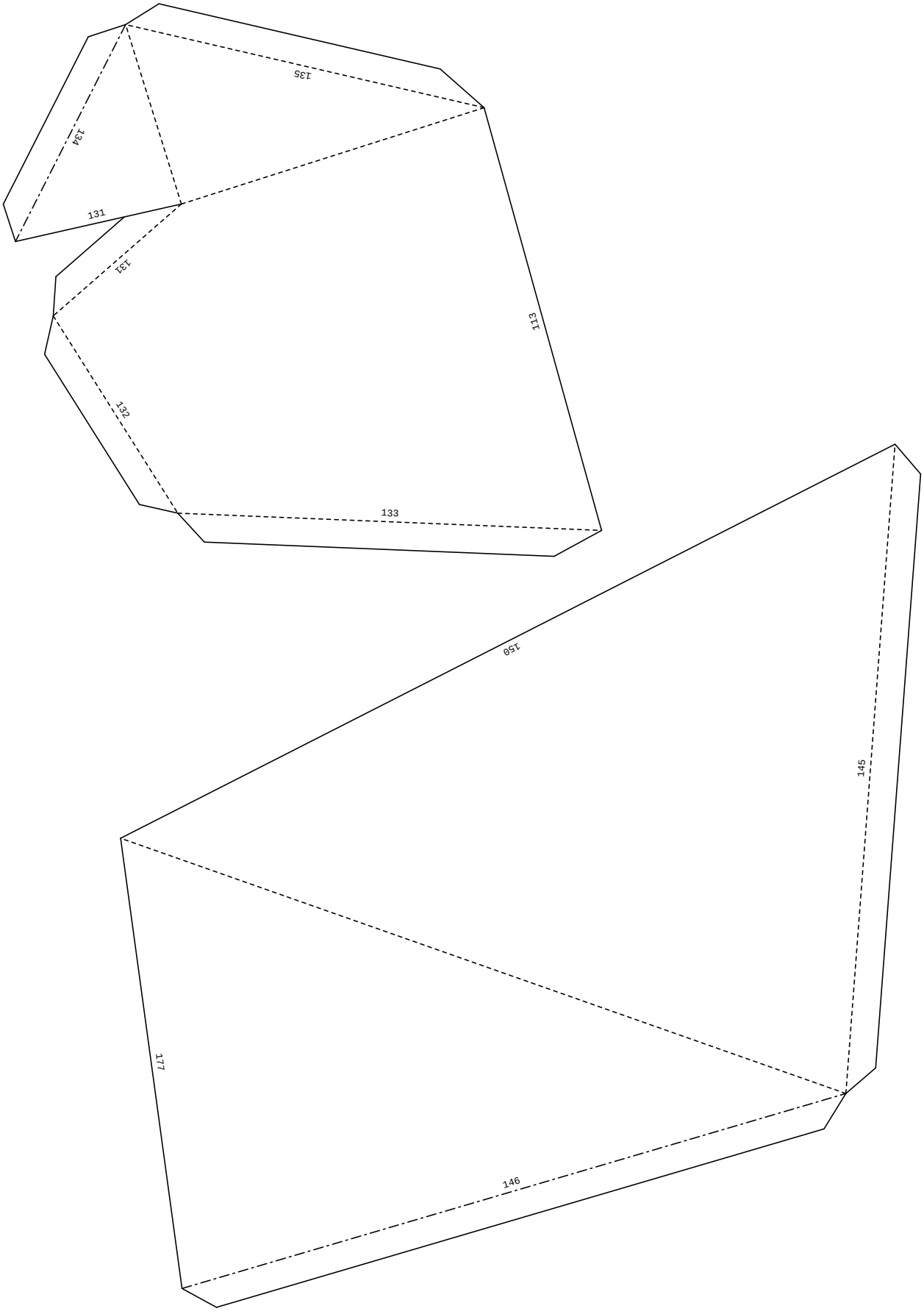
135
134
131
131
113
132
133
150
145
177
146

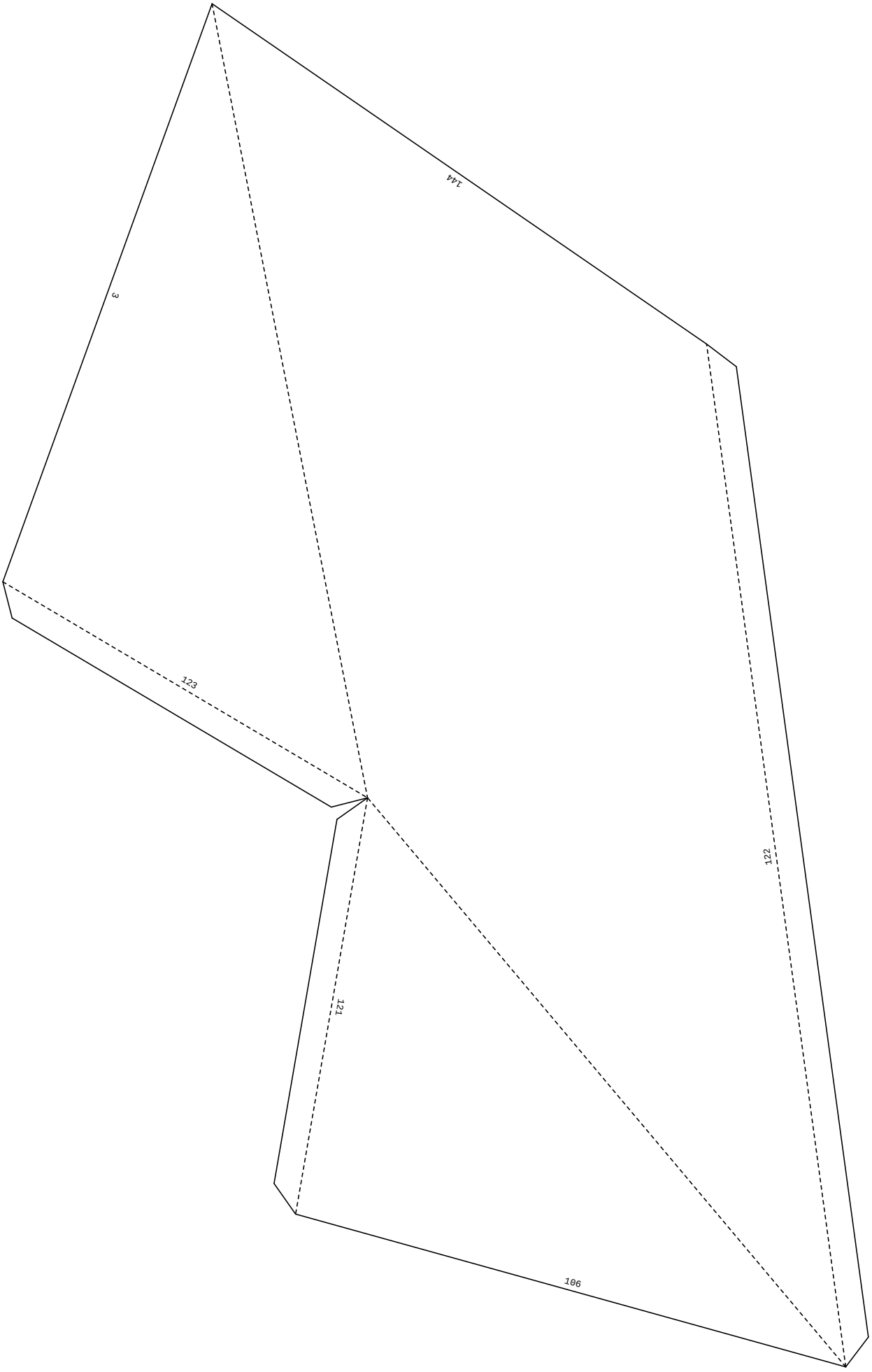
144
3
123
122
121
106

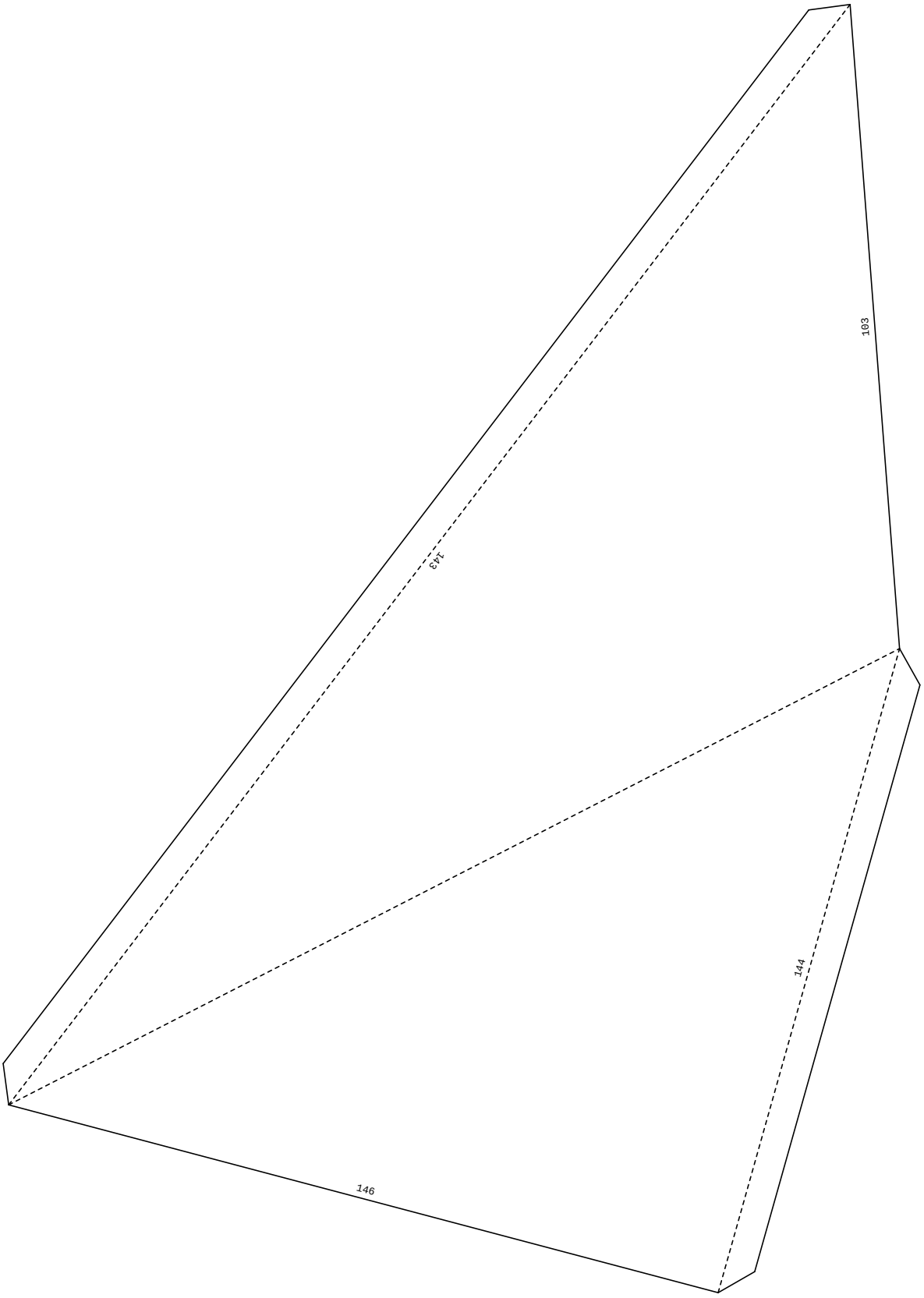
103
143
144
146

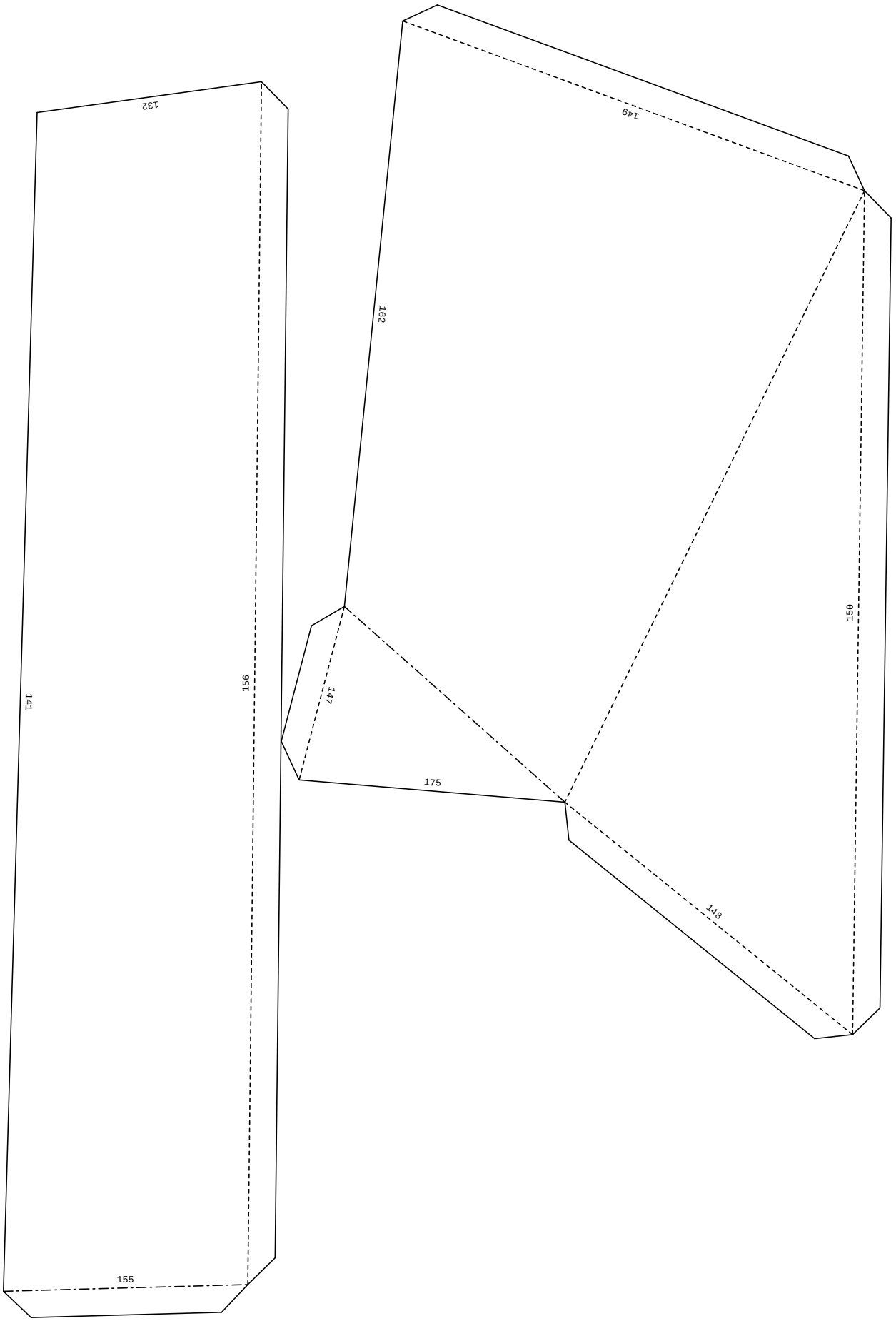
132
149
162
156
150
141
147
175
148
155

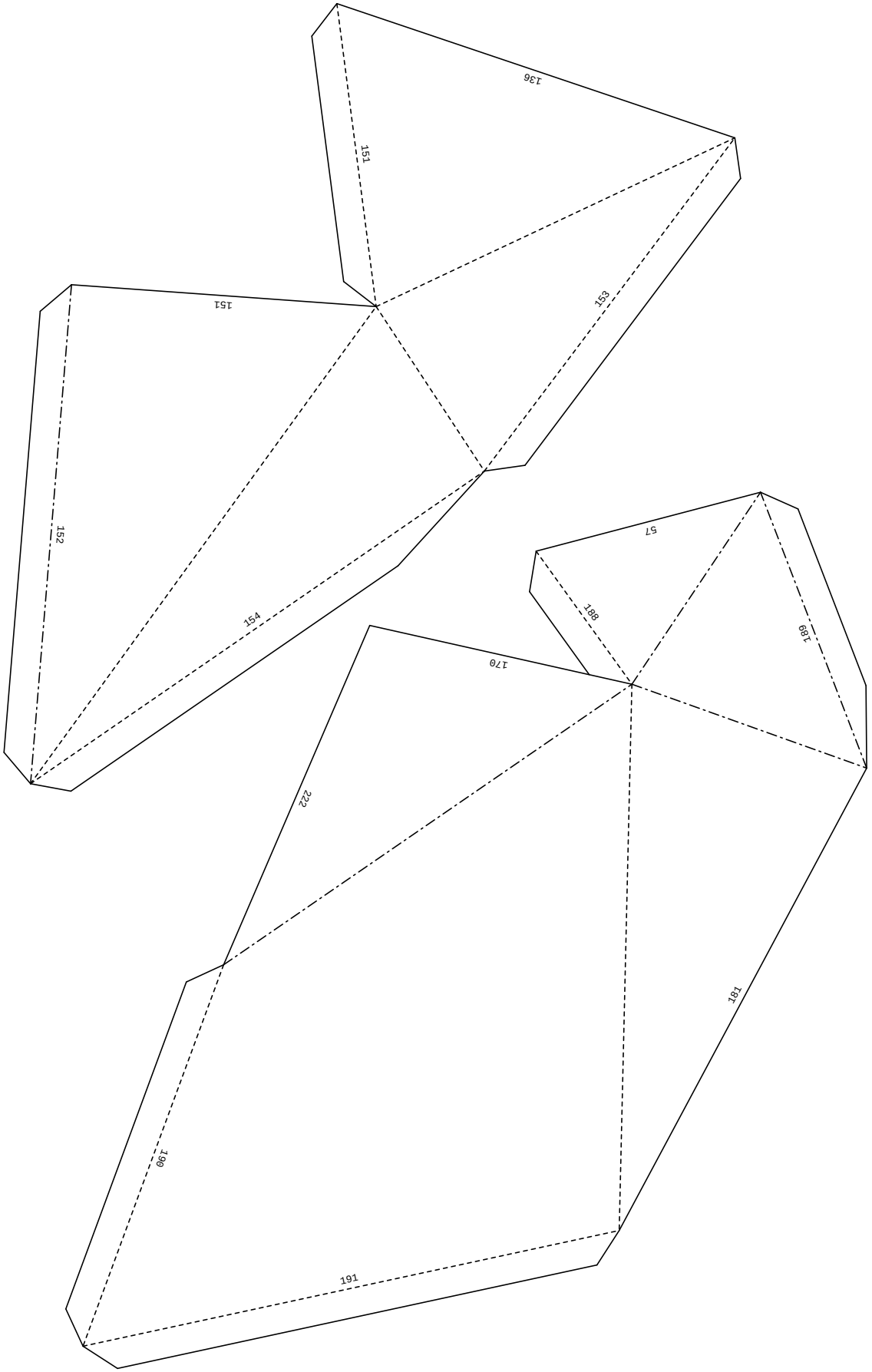
136
151
151
153
152
154
57
188
189
170
222
181
190
191

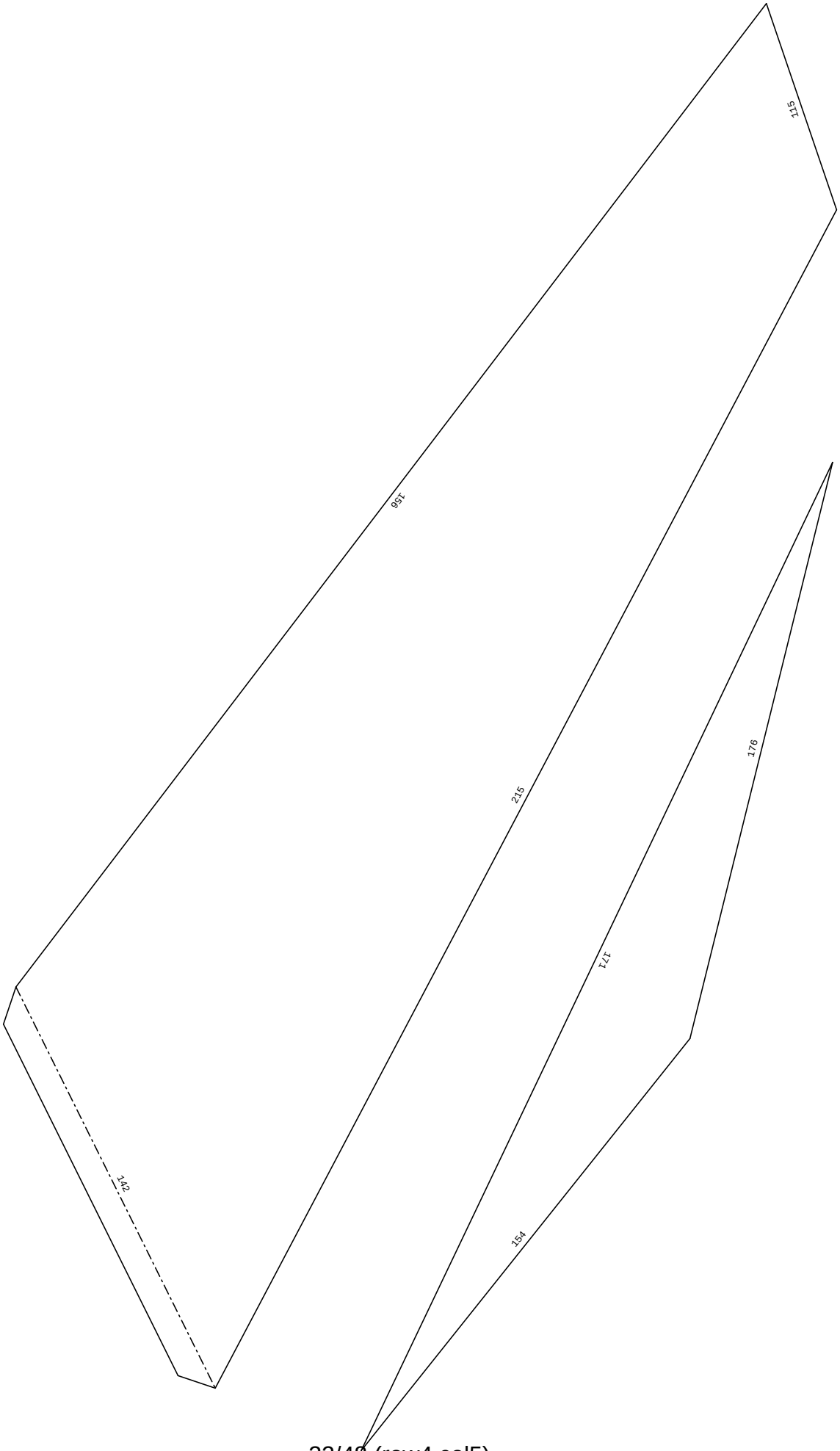
115
156
215
176
171
154
142

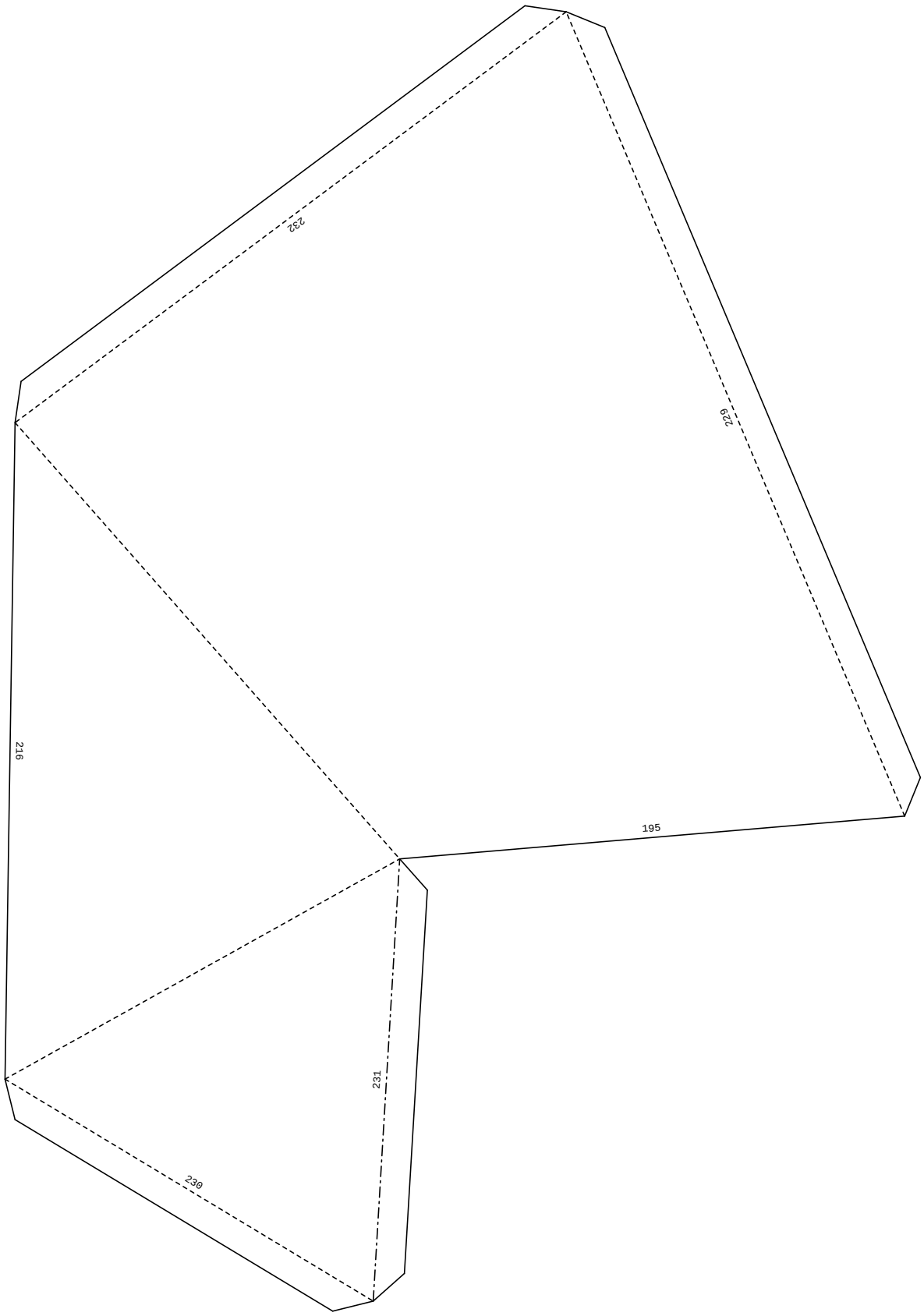
232
229
216
195
231
230

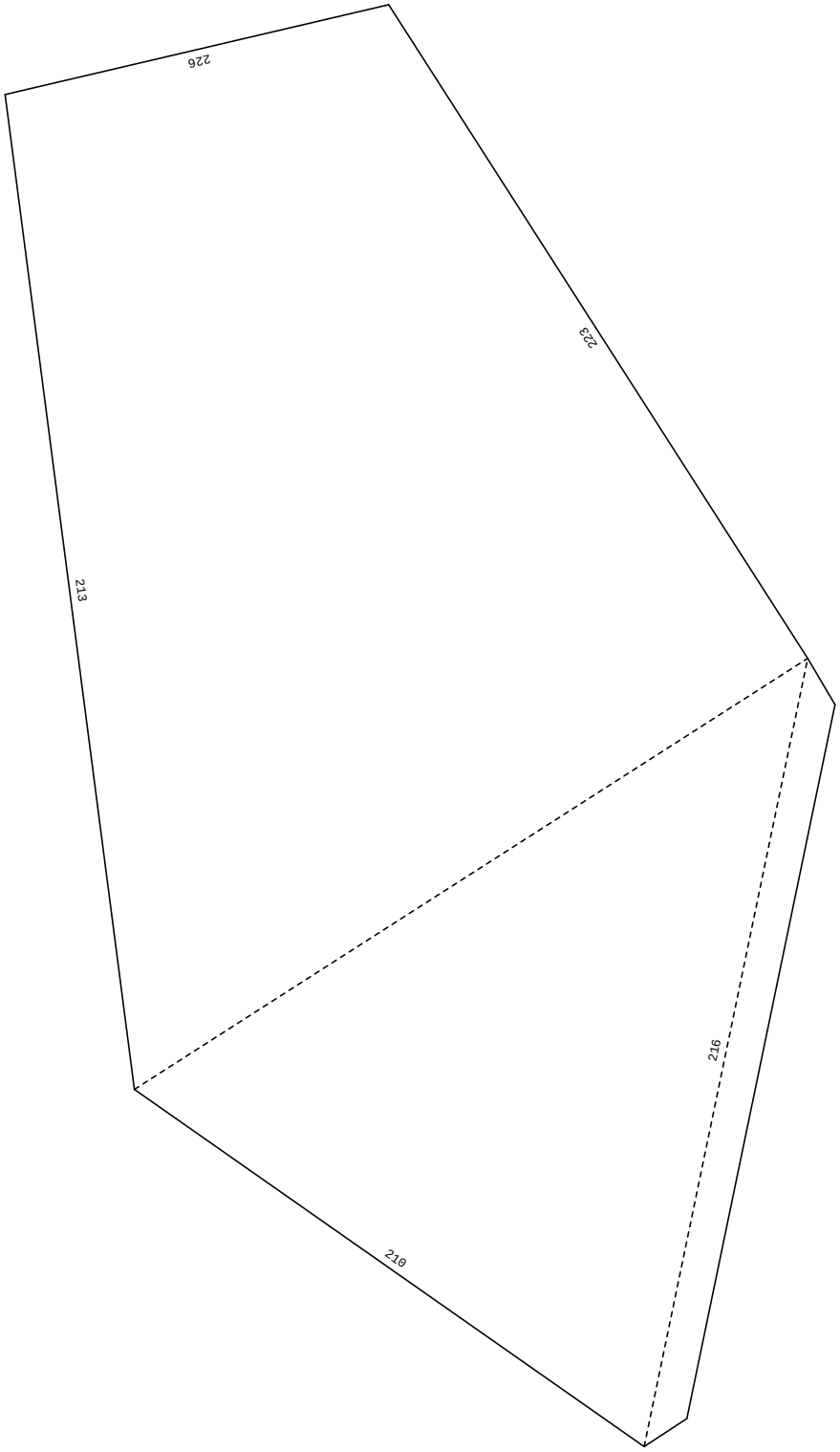
226
223
213
216
210

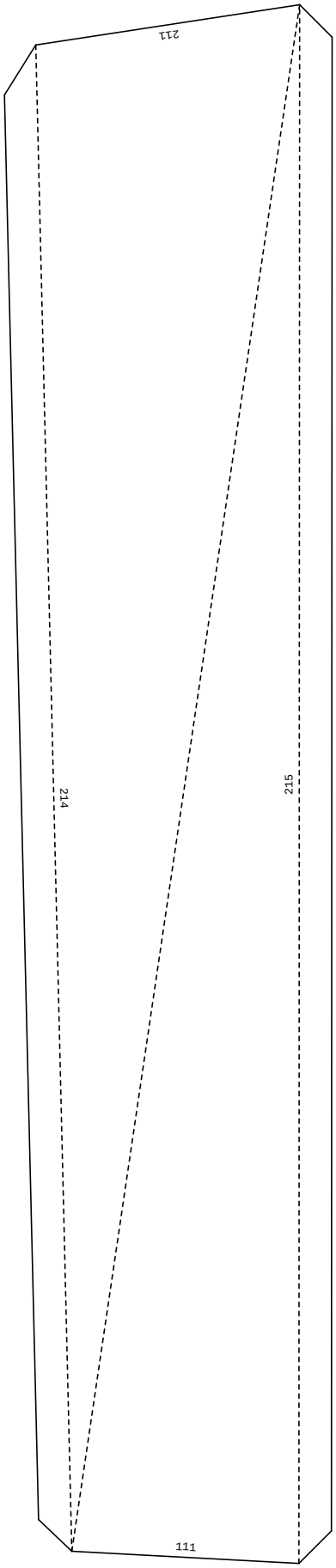
211
214
215
111

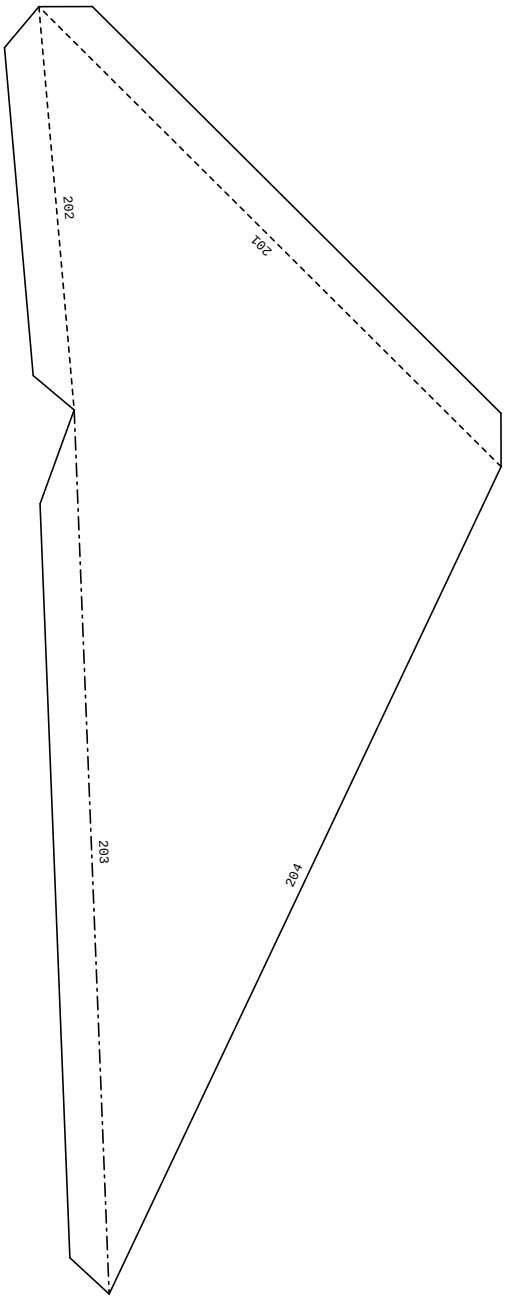
202
201
203
204

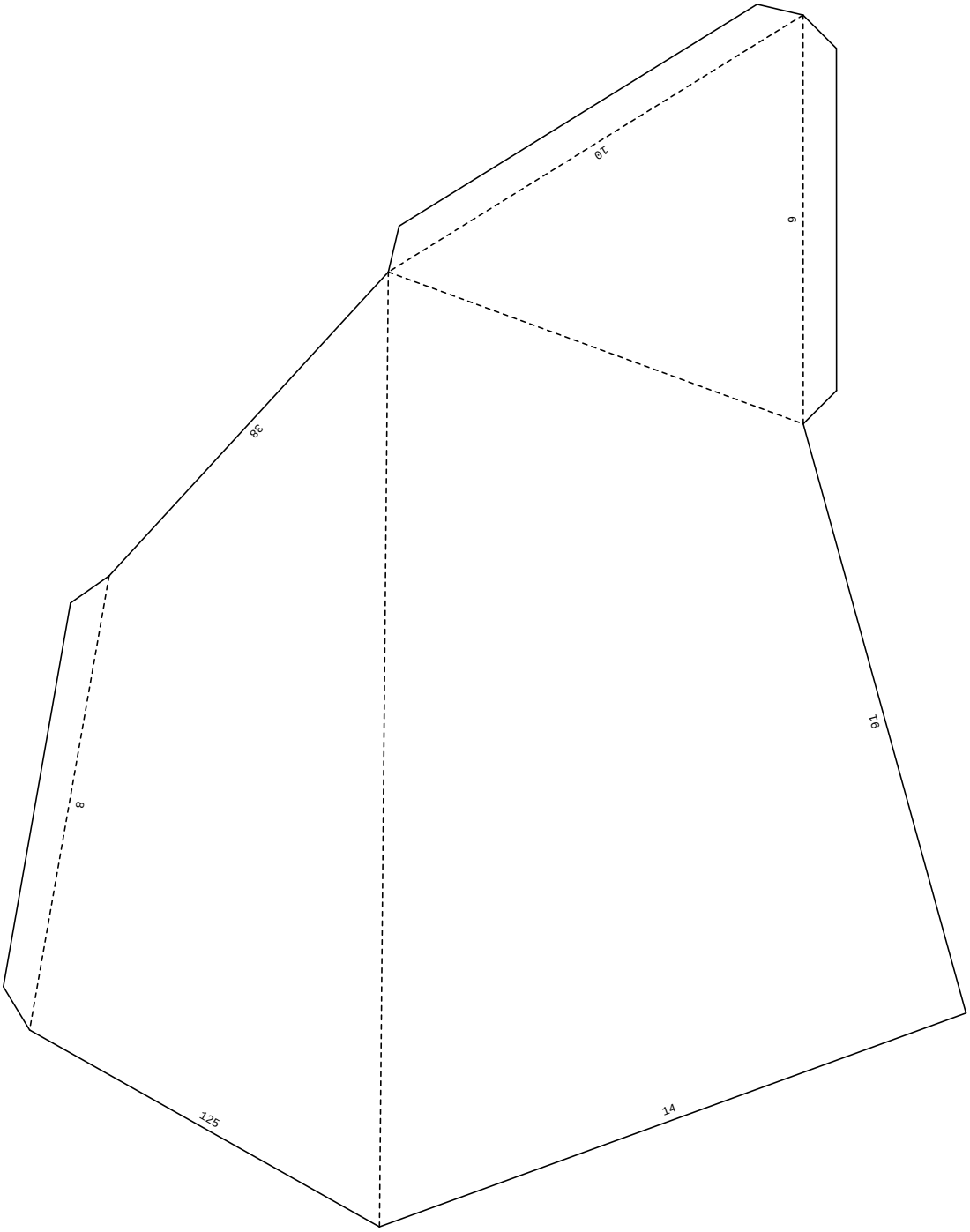
10
9
38
8
91
125
14

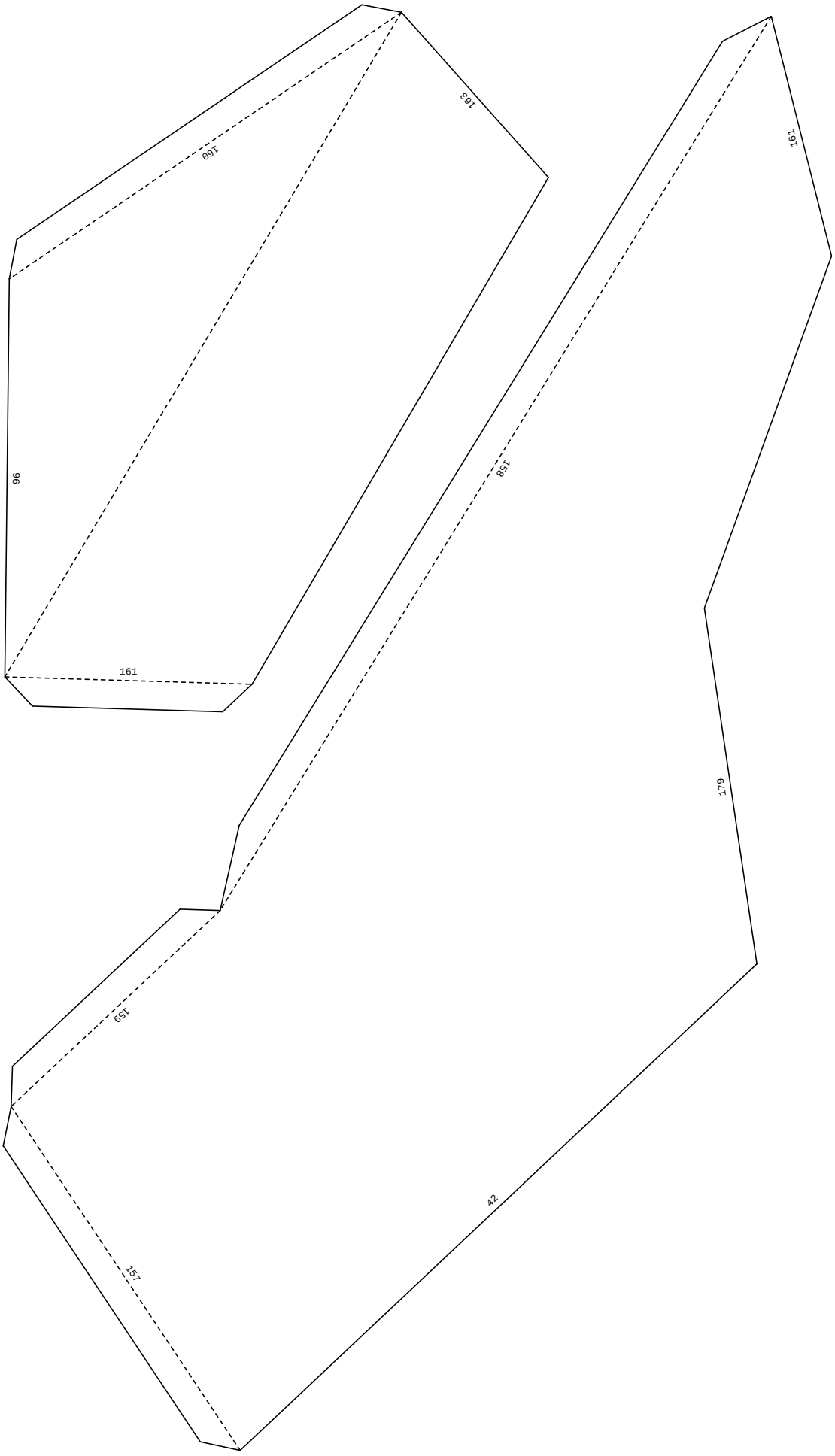
163
160
96
161
161
158
179
159
42
157

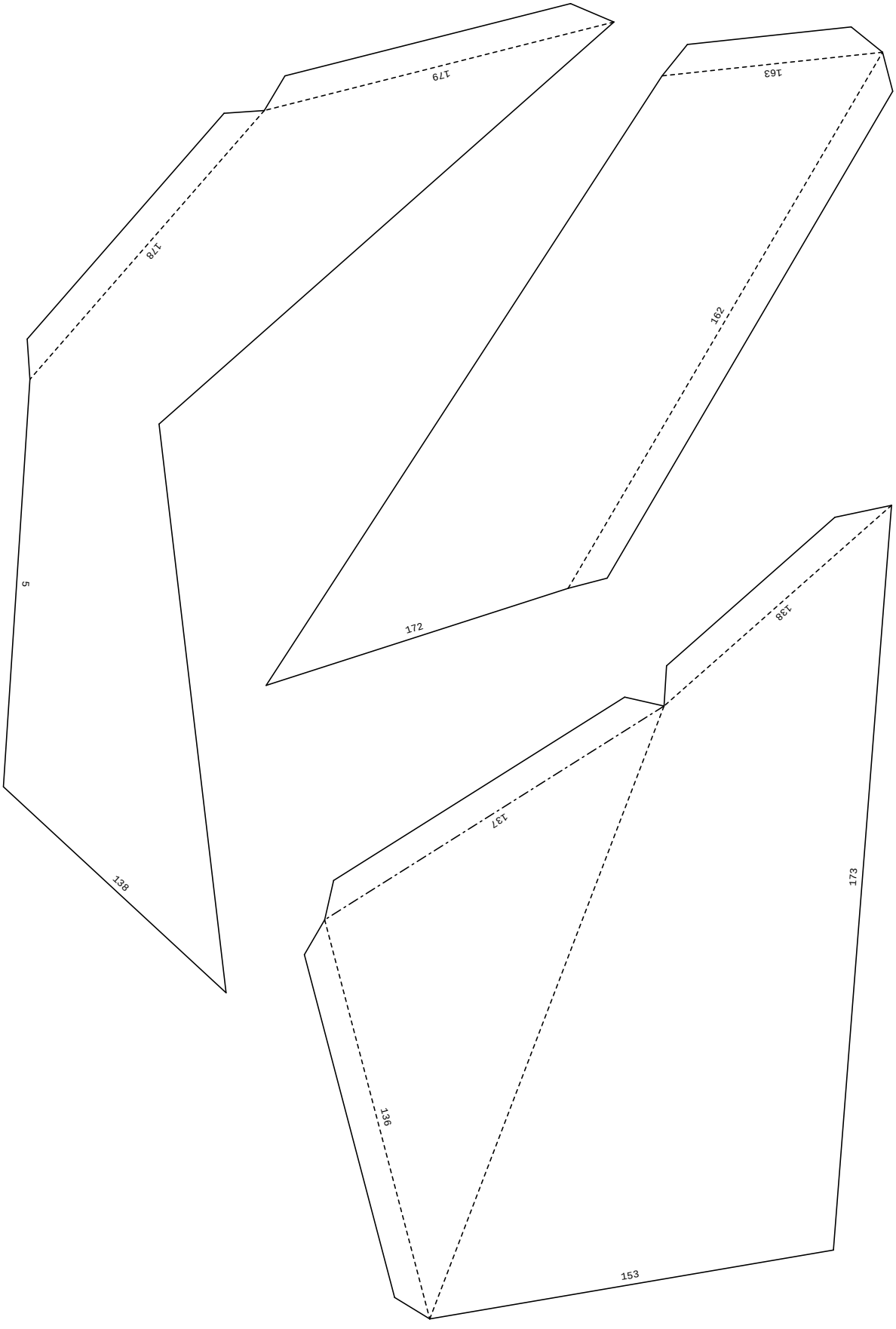
179
178
5
138
163
162
172
138
137
173
136
153

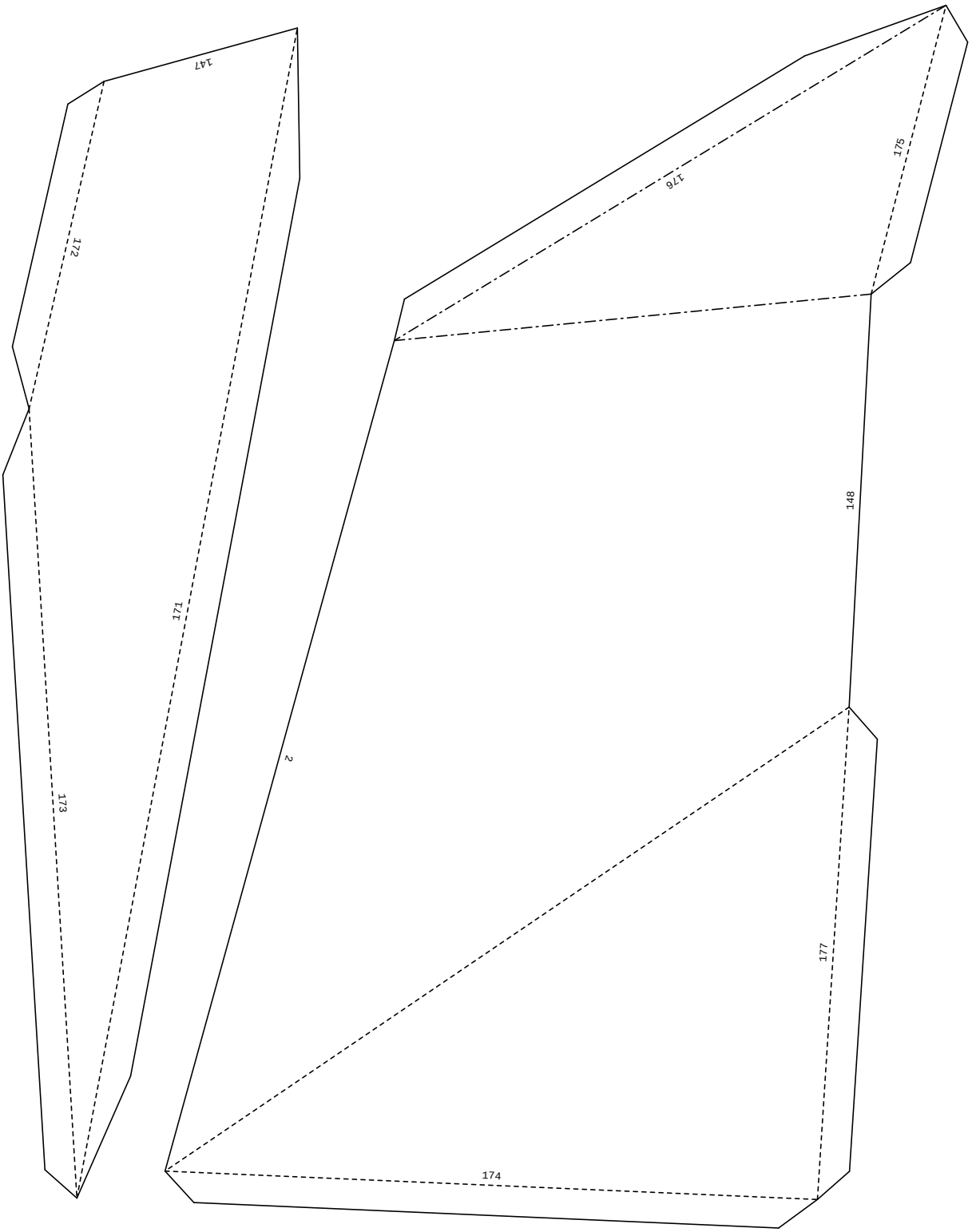
147
172
171
173
2
176
175
148
177
174

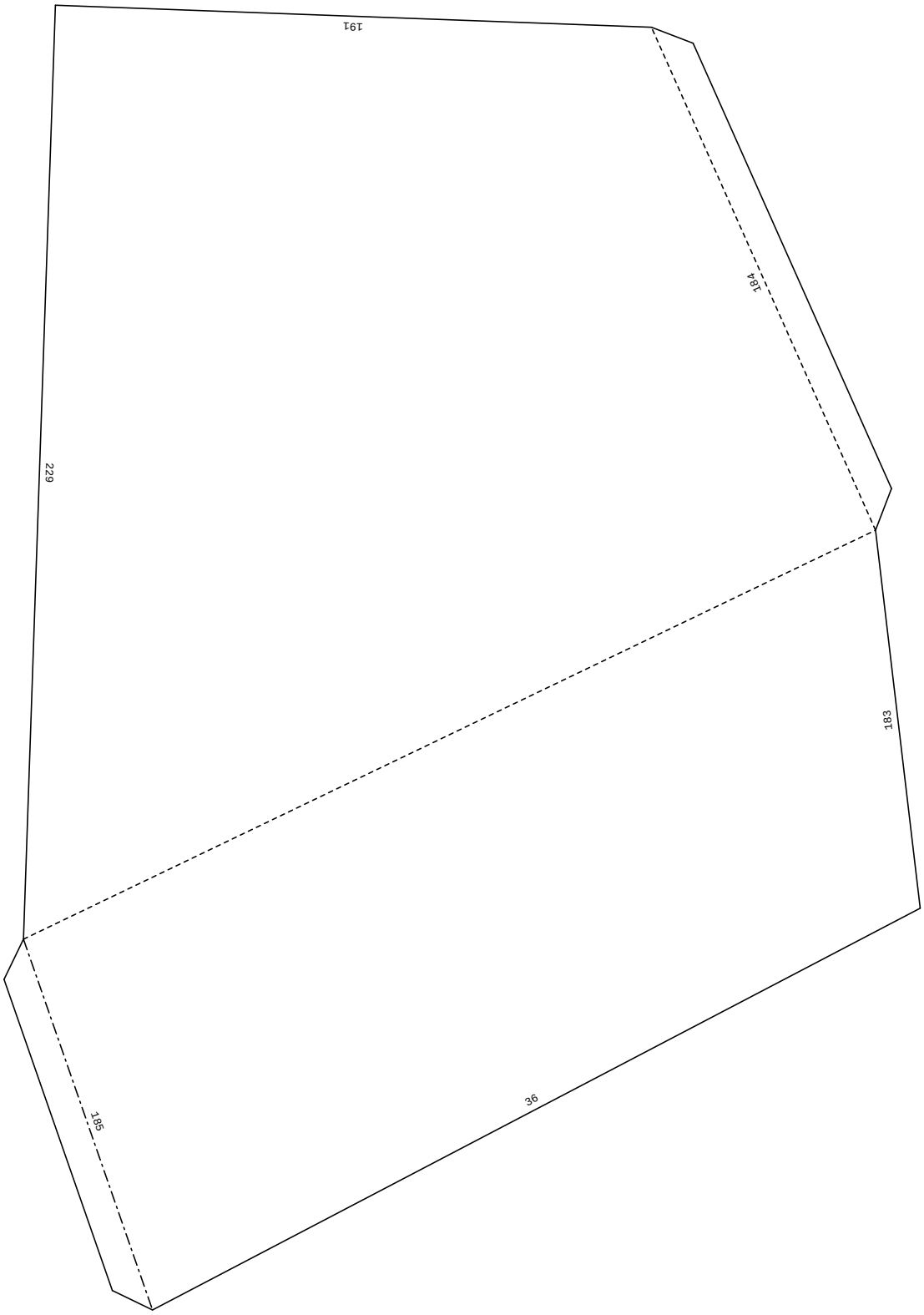
191
184
229
183
185
36

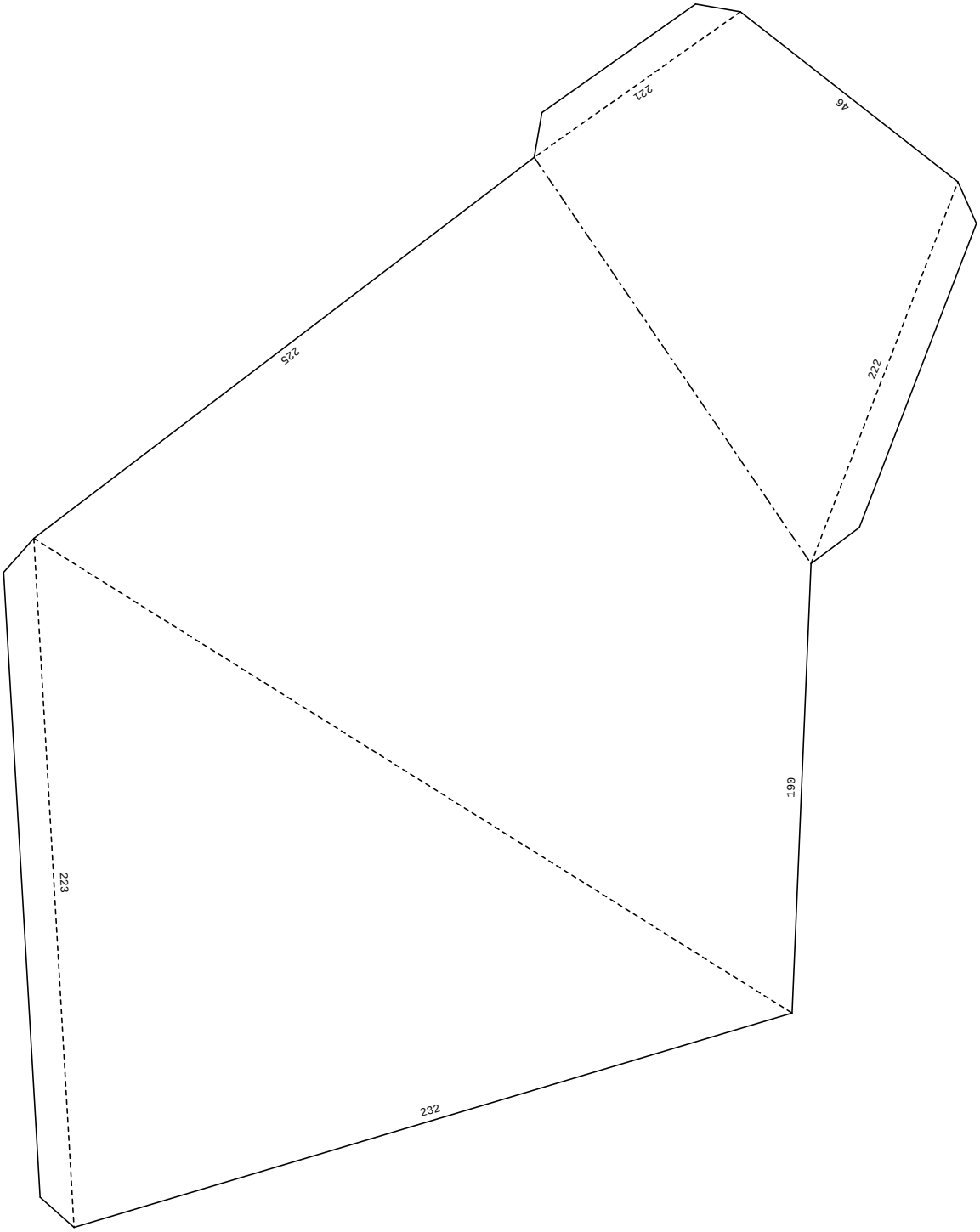
221
46
225
222
190
223
232

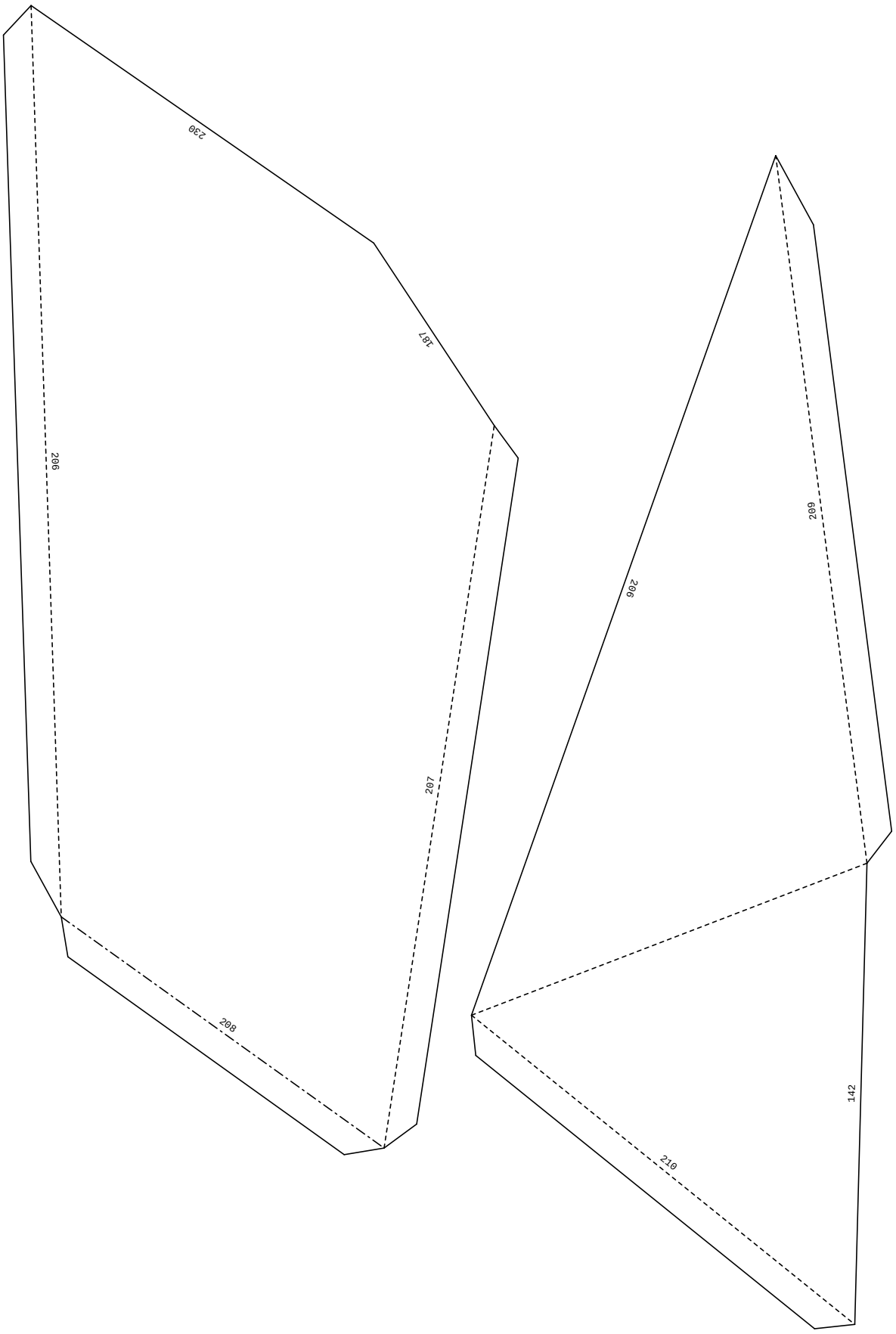
230
187
206
207
208
209
206
142
210

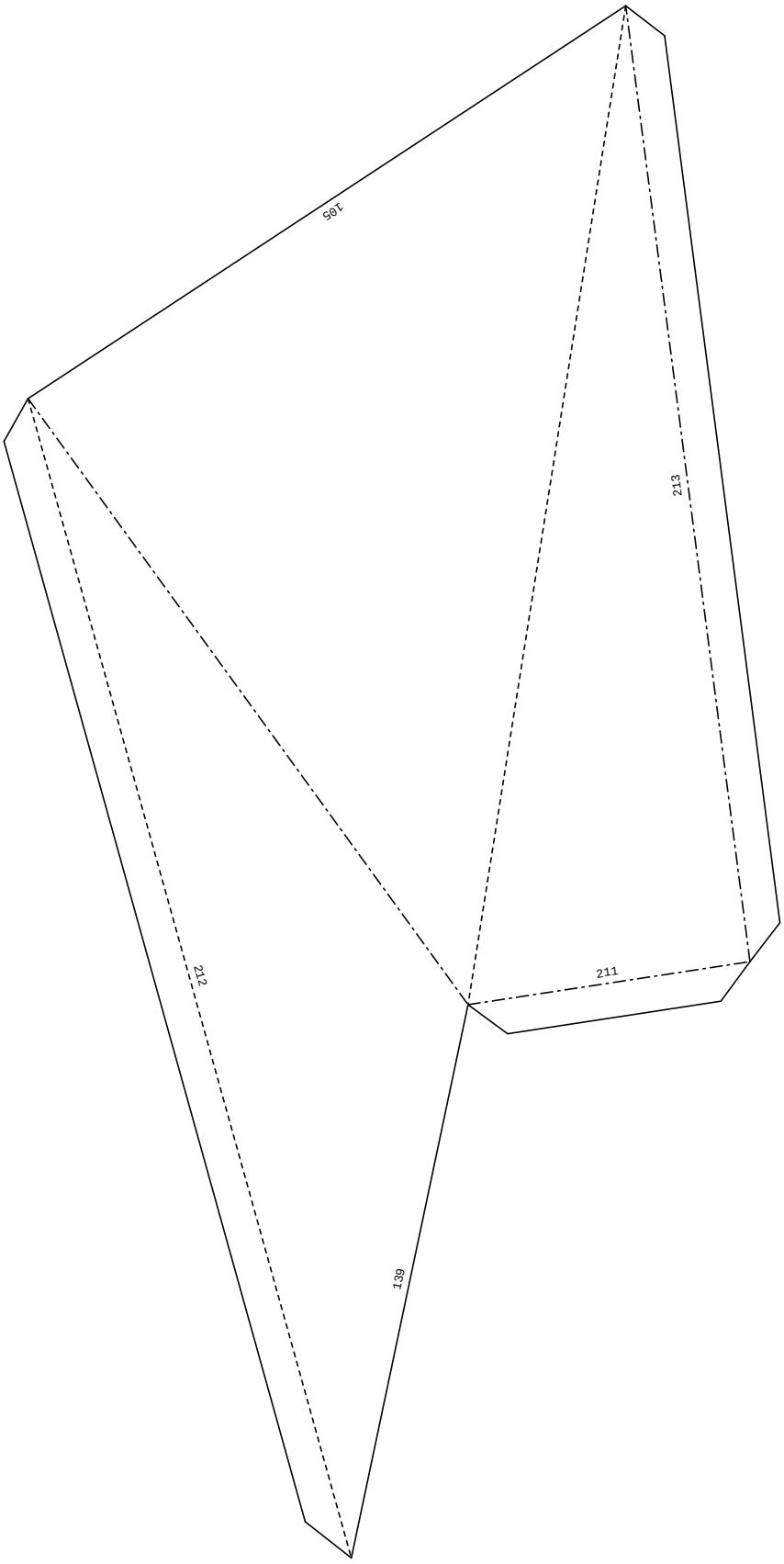
105
213
211
212
139

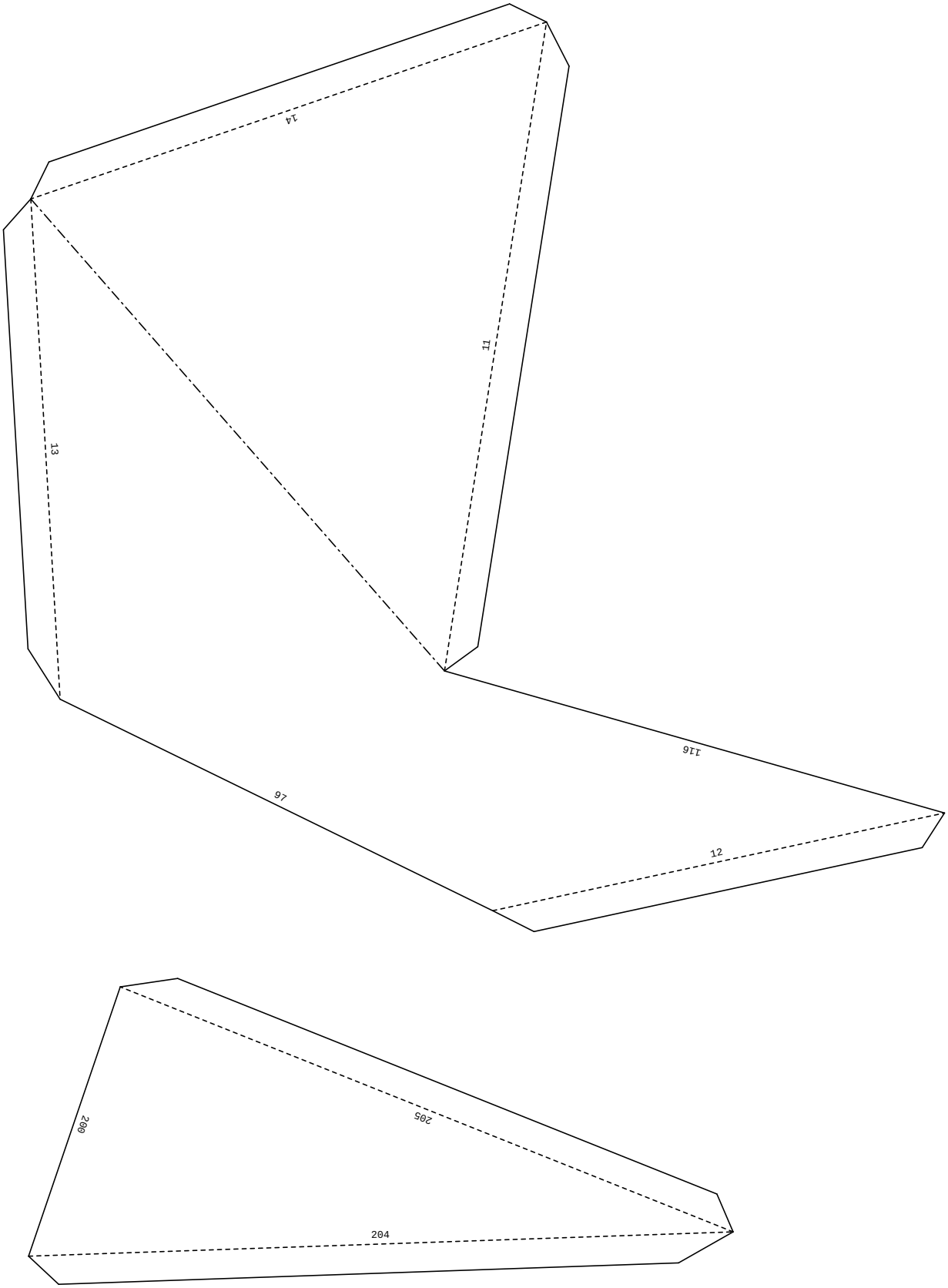
14
11
13
116
97
12
200
205
204

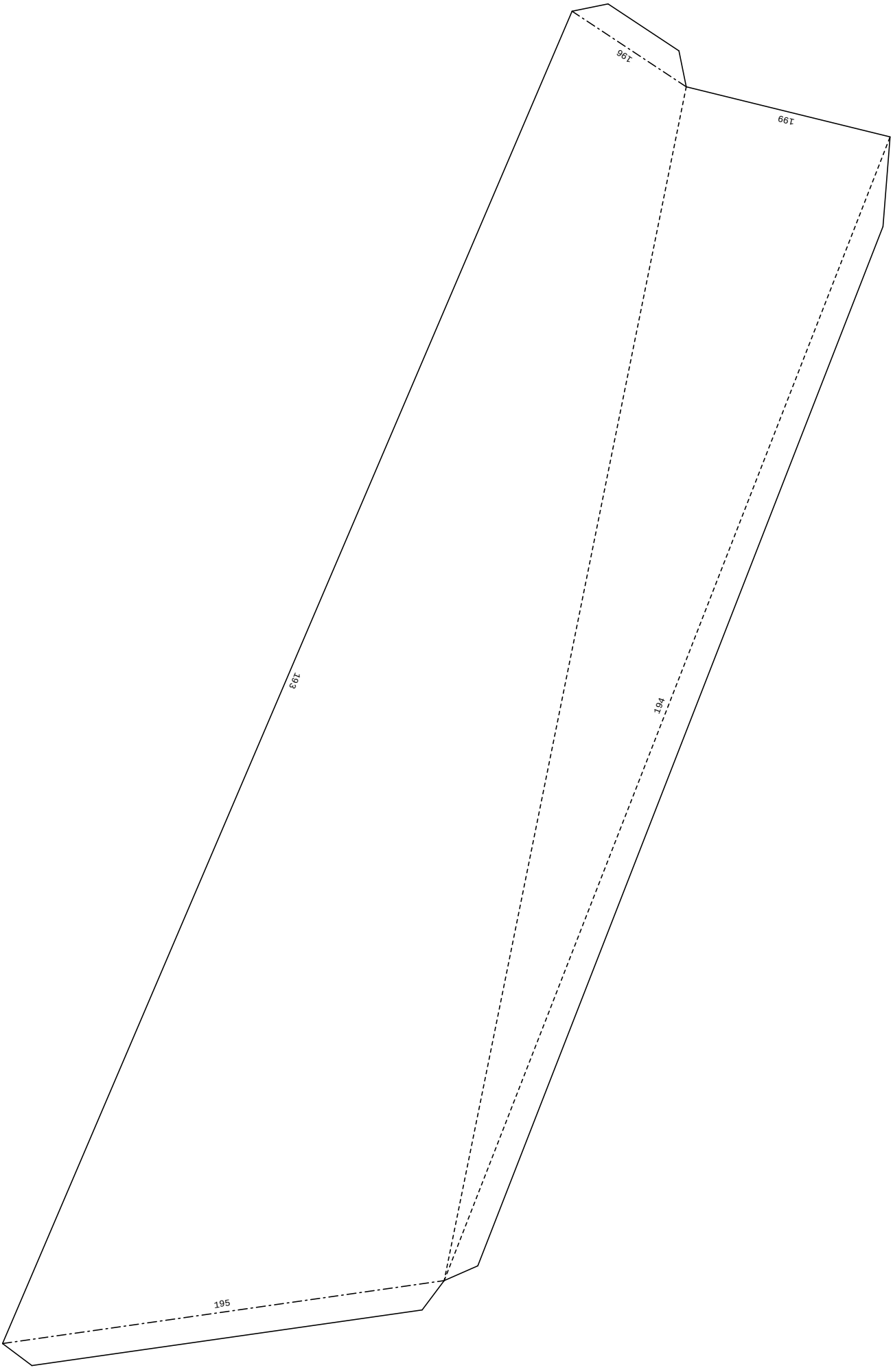

45/48 (row5 col9)

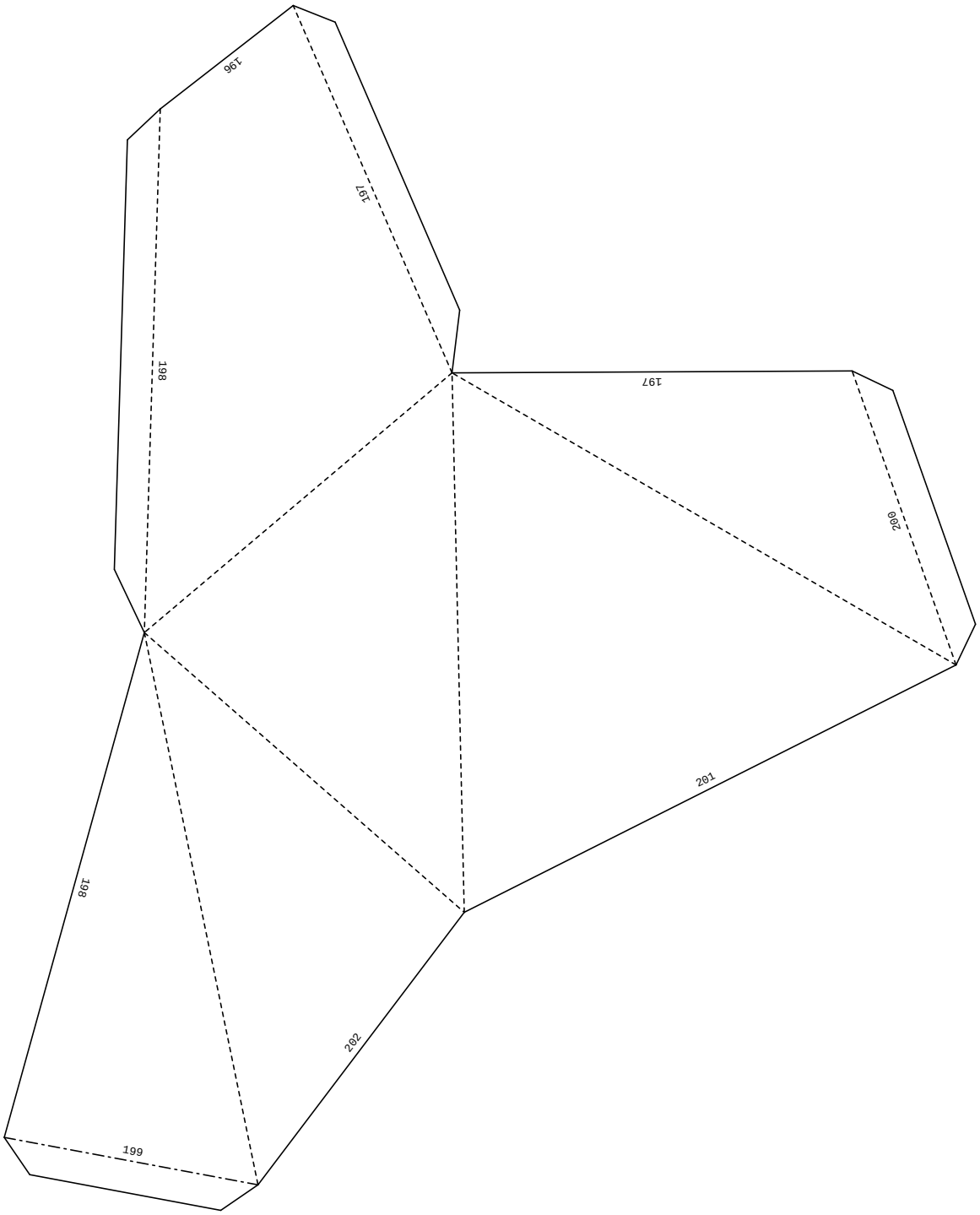
196
197
198
197
200
201
198
202
199

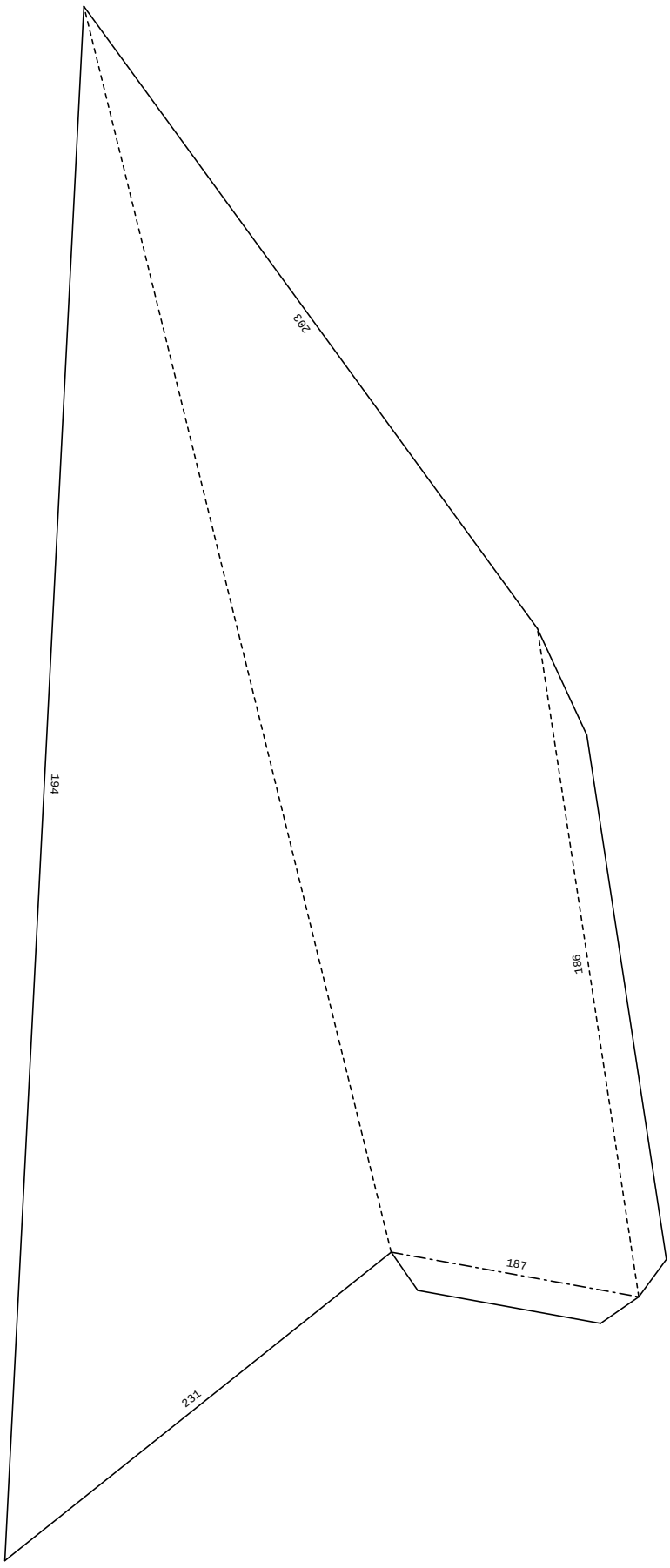
203
194
186
187
231

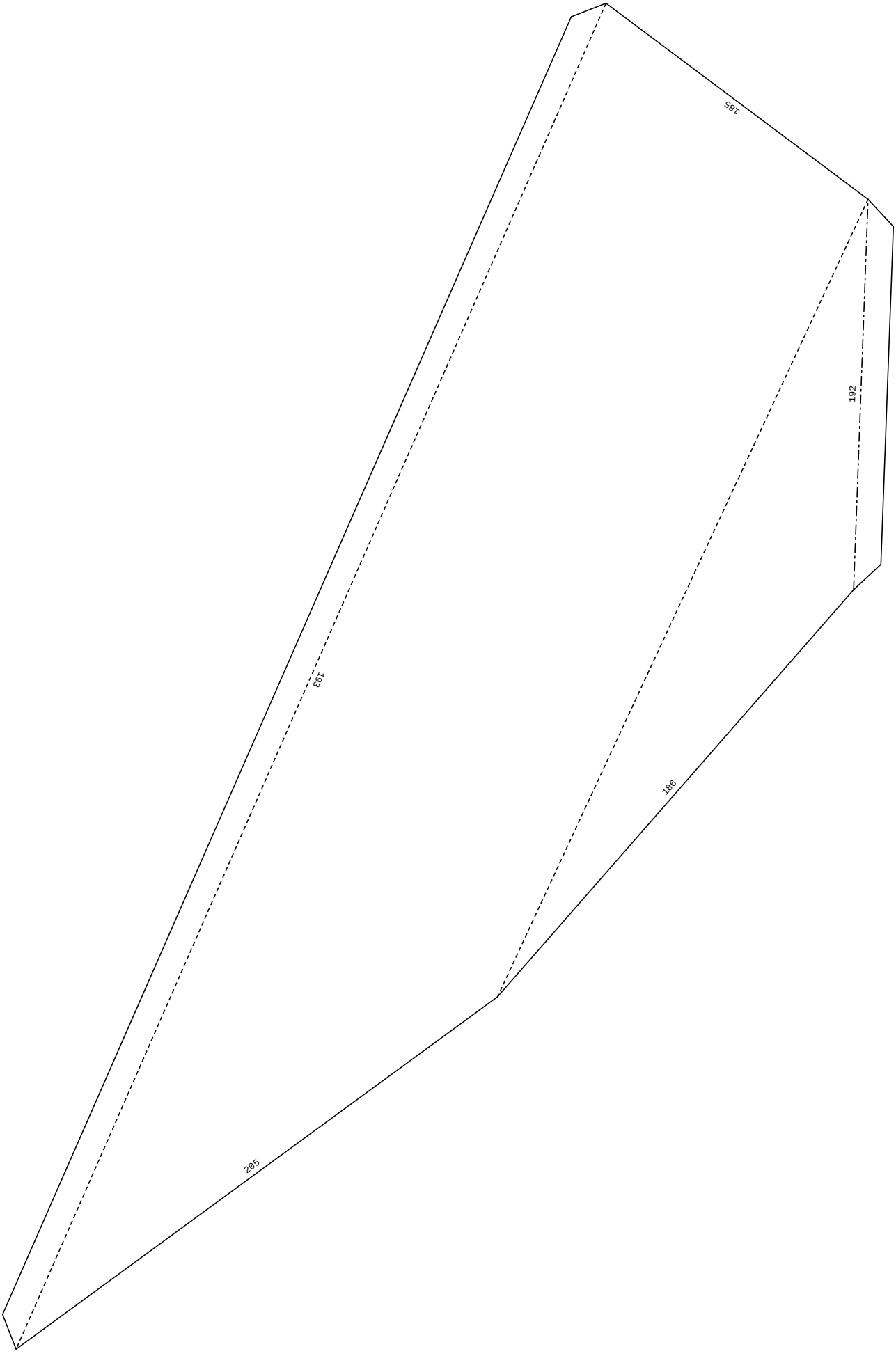
185
192
193
186
205